PLASMA CATALOG

CATALOGS FOR OXY-FUEL, LASER AND MIG/MAG/TIG CUTTING ARE AVAILABLE ON WWW.THERMACUT.COM

THERMACUT®
THE CUTTING COMPANY®

v. 150218

A PROGRESSIVE COMPANY FOR AN EVOLVING MARKET

Over a period of 25 years the Thermacut Group has undergone a multitude of changes. Thermacut (originally Tatras Imports Inc.) was incorporated in Claremont, New Hampshire in 1990 and sold under the brand ZAP Plasmatherm, a reseller of plasma consumables from local vendors directly to end-users. The company began operating with three employees, conducting business through telephone sales. In 1992, the company opened a small manufacturing facility and a sales office in the Czech Republic in 1996 to produce and sell plasma consumables and torches directly into the Eastern European market and through distributors in Western Europe under the brand name Thermacut utilizing both inside and outside sales representatives. And in 1993 the Thermacut brand was introduced into North America and sold through distributors.

In January of 1999 STK Gesellschaft für Schweißtechnik GmbH (a holding company 100% owned by the IBG Group of Cologne Germany) purchased 80% of the shares of Thermacut and in 2002 completed the acquisition to become the 100% shareholder of the Thermacut Group.

Since those early and humble beginnings, Thermacut has evolved into a major force in providing plasma torches and consumables through multiple sales channels supported by fourteen sales subsidiaries and with a close partnership with Abicor-Binzel (an IBG owned company) with locations in India, the Middle East, Turkey, Belarus, Denmark, Norway, Sweden, Finland, United Kingdom, Japan, South Korea, Vietnam and Australia. Based on customer demand Thermacut has also introduced TIG/WIG, MIG/MAG and Oxy-fuel products and produces those products at its modern ISO 9001 production facility located in Uherske Hradiste of the Czech Republic.

The Thermacut Group has focused its efforts in providing high quality direct replacement consumable and torch product lines that will meet or exceed the expectations of our valued customers, cutting and welding metals thermally throughout the world. But as our customer base expanded, their expectations and demands also increased, where in 2005 Thermacut expanded its product portfolio with the addition of advanced consumables, which have included products such as the Silver Plus™, Silver Pro™ and SilverEX-® electrodes, plus the patented TungstenEX-™ nozzles. At that time to signify our advanced products offerings we also updated our corporate image, introducing a new logo, a new orange and black color scheme, and a new slogan: "Advanced Consumables" and a mission to be the Providers of Advanced Cutting and Welding Consumables Worldwide.

By 2013, the Thermacut Group continued to expand and evolve in the thermal cutting and welding marketplace. In December of 2012 the Thermacut Group concluded the purchase of the HOLMA® AG, a producer of premium quality laser consumables, which enhances our customer's ongoing requests for a high quality laser consumable brand and a further expansion of Thermacut's plasma cutting and oxy-fuel consumable product portfolio.

In September 2013 at the SCHWEISSEN & SCHNEIDEN Exposition, the Thermacut Group evolved once again with the introduction of a line of plasma cutting systems for both manual and mechanized plasma processes up to 65 mm thickness. The initial introduction will feature a 105 amp system. Thermacut also had the 65 and 85 amp systems on display.

During 2015 the line of plasma systems will be rolled out on a planned basis, which will range from 30 amps to 125 amps. This change will mark a major commitment to our valued customers throughout the world and thrust Thermacut into the ranks of a full line plasma OEM.

Recognizing this continuing evolution is important, so the Thermacut Group has updated its logo, change its' slogan to "The Cutting Company" and further its mission by becoming a "Global Provider of Thermal Cutting Technology".

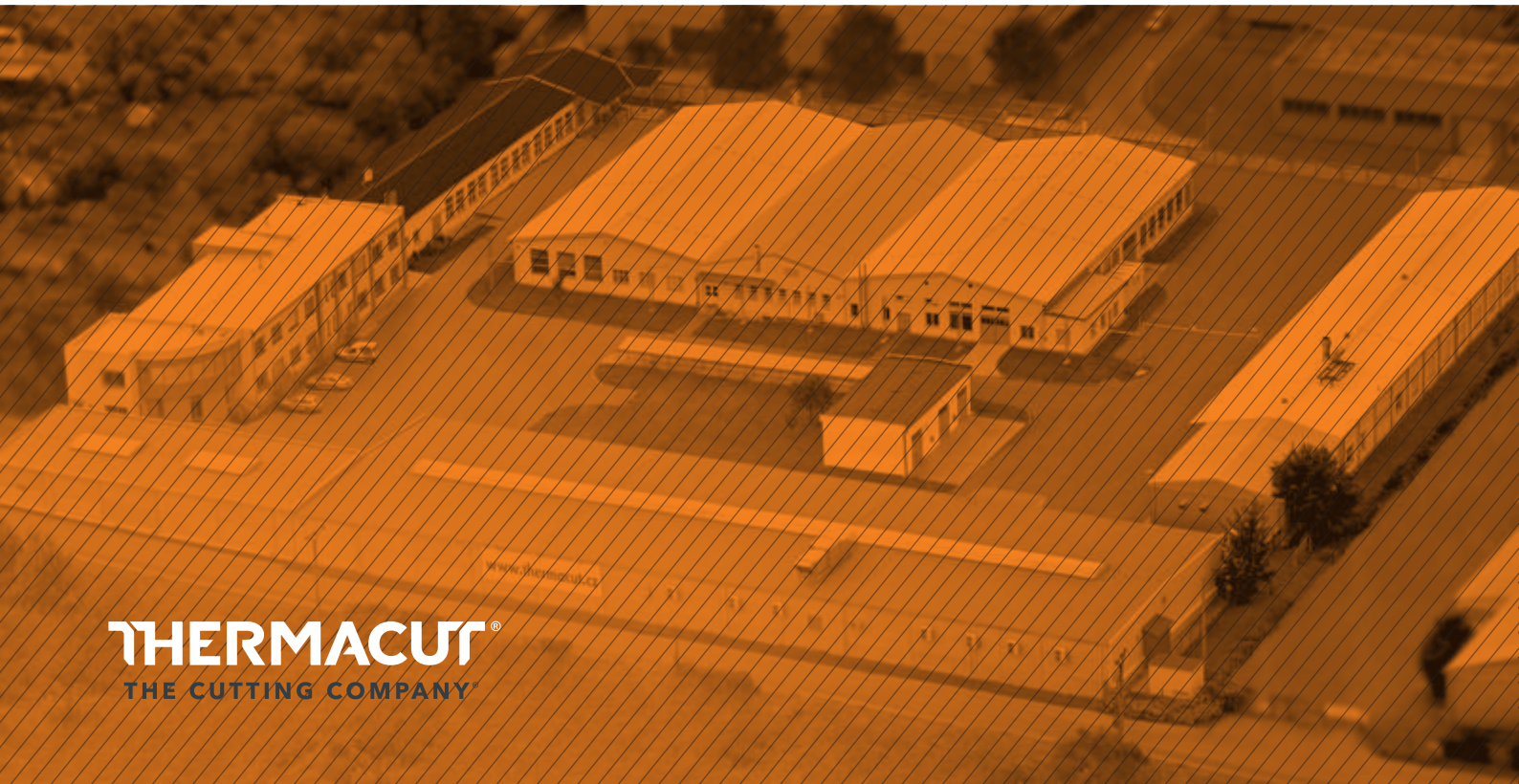

ADDRESSES AND CONTACTS

CZECH REPUBLIC
THERMACUT, k.s.
Headquarters and Production
Sokolovská 574, Mařatice
686 01 Uherské Hradiště
Tel.: +420 572 420 411
Fax: +420 572 420 420
E-mail: info@thermacut.cz
reditelstvi@thermacut.cz
www.thermacut.cz

CZECH REPUBLIC
THERMACUT, k.s.
Central Sales Department
Dukelská 76A
742 42 Šenov u Nového Jičína
Tel.: +420 556 423 418, 440
Fax: +420 556 423 443, 444
E-mail: sales@thermacut.cz
obchod@thermacut.cz
www.thermacut.cz

GERMANY
THERMACUT GmbH
Essener Str. 1
D-57234 Wilnsdorf
Tel.: +49 2739-4033-0
Fax: +49 2739 4033 77
E-mail: info@thermacut.de
www.thermacut.de

USA
THERMACUT, Inc
153 Charlestown Road
Claremont, NH 03743
Phone: +1 (800) 932-8312
+1 (603) 543-0585
Fax: +1 (800) 972-6255
+1 (603) 542-2867
E-mail: sales@thermacut.com
www.thermacut.com

SUBSIDIARIES

CROATIA
THERMACUT CROATIA d.o.o.
Daničićeva 12
532 70 Senj
Tel.: +385 53 882 599
Fax: +385 53 882 622
E-mail: thermacut@gs.t-com.hr

HUNGARY
THERMACUT HUNGÁRIA Kft.
Petőfi Sándor utca 37 atd.
2500 Esztergom
Tel.: +36 33 502 090,1
Fax: +36 33 400 004
E-mail: info@thermacut.hu
www.thermacut.hu

CHINA
SHANGHAI WELDSTONE ASIA CO.,LTD
206#/2F,B BLOCK,
ETERNAL ASIA SQUARE,
NO.202 JINYUE ROAD,PUDONG
SHANGHAI,CHINA
Post: 201206
Mobile: 13901616665
Tel.: 6-21-50390667
Fax: 6-21-50390677
E-mail: thermacut@weldstone.cn

POLAND
THERMACUT-POLAND Sp. z o.o.
Aleja Jana Łyska 3
43-400 Cieszyn
Tel.: +48 33 852 39 71
Tel./Fax: +48 33 852 13 34
E-mail: thermacut@pro.onet.pl
www.thermacut.pl

SUBSIDIARIES

ROMANIA
THERMACUT ROMANIA SRL
B-dul 1 Decembrie 1918 nr. 127A
540445 Tg. Mures, Jud. Mures
Tel.: +40 265 263205, +40 365 401012
Fax: +40 265 250 317
E-mail: office@thermacut.ro
www.thermacut.ro

RUSSIA
ООО “ТЕРМАКАТ”
454048 Г. ЧЕЛЯБИНСК
УЛ. КИРОВОГРАДСКАЯ Д.2
Тел.: +7 351 211 20 77, +7 351 211 64 76
Тел./факс: +7 351 211 08 15

ФИЛИАЛ
129343 Г. МОСКВА
УЛ. УРЖУМСКАЯ Д.4
Тел.: +7 495 778 42 10

E-mail: info@thermacut.ru
www.thermacut.ru

SLOVAKIA
THERMACUT SLOVAKIA, s.r.o.
M. R. Štefánika 14
942 01 Šurany
Tel.: +421 356 501516-8
Fax: +421 356 501518
E-mail: obchod@thermacut.sk
www.thermacut.sk

UKRAINE
ООО “Термакат Украина ГмбХ”
ул. Петропавловская 24
с. Петропавловская Борщаговка
Киево-Святошинский р-н
08130
Тел./факс: +380 44 403 16 99
Моб. тел: +380 50 336 33 91
E-mail: info@thermacut.ua
www.thermacut.ua

SALES COOPERATION WITH ABICOR-BINZEL

AUSTRALIA
BINZEL PTY LTD.
42 Hinkler Road
Mordialloc
Victoria 3195
Ph: +61 (0)3 9587 8522
Fax: +61 (0)3 9580 8796
E-mail: sales@thermacut.com.au

BELARUS
OOO ABICOR BINZEL TECHNICS
ul. Timirjazeva 97-21
BY-220020 Minsk
Tel.: +375 29 5 800 300
E-mail: info@thermacut.by

BRAZIL
BINZEL DO BRASIL INDUSTRIAL Ltda
Estrada União e Indústria, Km 15,5-Lt 17,
Pedro do Rio, Petrópolis – Rio de Janeiro
CEP 25750-226
Tel.: + 55 (24) 2222-9799
+ 55 (24) 2222-9789
Celular: + (24) 98134-2676
Fax.: + 55 (24) 2222-9789
E-mail: thermacut@thermacut.com.br
www.thermacut.com.br

DENMARK
ALEXANDER BINZEL AB (SVERIGE)
Abicor Binzel AS (Denmark)
Ringugnsgatan 4
SE-216 16 Limhamn
Sverige
Tel.: +46 40-699 17 50
Fax: +46 40-699 17 70
E-mail: ac@binzel.se (Sverige)
E-mail: knet@c.dk (Denmark)
www.binzel-abicor.com

FINLAND
ABICOR BINZEL Finland Oy
Kartanontie 53
FI28430 Pori
Tel.: +358 2 634 4600
Fax: +358 2 634 4650
E-mail: info@binzel.fi

FRANCE
THERMACUT FRANCE
6 Rue des Frères Lumiere
67201 Eckbolsheim
Tel.: +33 3 88 76 25 78
E-mail: thermacut@thermacut.fr
www.thermacut.fr

GREAT BRITAIN
ALEXANDER BINZEL UK LTD
Binzel House
Mill Lane
Winwick Quay
Warrington
WA2 8UA
Cheshire
Tel.: +44 1925 653944
Fax: +44 1925 654861
E-mail: info@abimail.co.uk
www.binzel-abicor.co.uk

INDIA
ABICOR BINZEL TECHNOWELD PVT LTD
SNo: 297, Indo German Technology park
Village: Urawade
Taluka: Mulshi
District: Pune- 412 115
Phone: 020-66743914, 020-39502691
E-mail: commercial@abicor-india.com

JAPAN
BINZEL JAPAN LTD
5-1, Iga 6 - Chome, Habikino,
J-Osaka (583-0876)
Tel.: +81-(0)72-952-1345
Fax: +81-(0)72-954-7745
Mob: +81-(0)90-2681-3107
E-mail: araga@binzel-abicor.co.jp

KAZAKHSTAN
ABICOR BINZEL CENTRAL ASIA
Республика Казахстан
010000, г. Астана
ул. Жетиген, 57, офис 6
E-mail: info@thermacut.com.kz
www.thermacut.com

SALES COOPERATION WITH ABICOR-BINZEL

MEXICO
BINZEL MEXICO S.A. de C.V.
C. Municipio de Pabellón
de Arteaga No. 102
Valle de Ags., C.P. 20358
San Fco. de los Romo, Ags.
Tel.: +52 (449) 1581765
Fax: +52 (449) 9731388
E-mail: info@thermacut.com.mx
www.thermacut.com.mx

NORWAY
BINZEL NORGE A/S SVEISETEKNIKK
Industriveien 1
N-3300 Hokksund
Tel.: 0047-32 25 19 90
Fax: 0047-32 75 46 83
E-mail: post@binzel.no

SOUTH KOREA
ABICOR BINZEL KOREA LTD.
Post Code 462-729, #606, #607, #608 Kranz-
Techno, Sangdaewon-dong, Jungwon-gu
KOE-Sungnam City, Gyeonggi-do 5442-1
Tel.: 0082 (31) 732 6065 / 6066 / 6067
Fax: 0082 (31) 732 6064
E-mail: don.kim@binzel.kr

SWEDEN
ALEXANDER BINZEL AB
Ringugnsgatan 4
S-21616 Limhamn
Tel.: 0046- 40 6 991 750
Fax: 0046- 40 6 991 770
E-mail: order@binzel.se

TURKEY
ABICOR BINZEL KAYNAK TEKNIK
Ticaret LTD. STI.
Girne Mah. Irmak Sok. Küçükyalı iş Merkezi E
Blok No:06 PK:34852
Maltepe İstanbul Türkiye
Tel.: +90 (216) 367 90 00
Fax: +90 (533) 367 90 14
E-mail: info@thermacuttr.com
www.thermacut.com.tr

VIETNAM
MAI ANH MINH CO LTD
No.17, Street 34, Binh Tri Dong B Ward,
Binh Tan District,
VN-Hochiminh City
Tel.: 0084-8-3963 7797
Fax: 0084-8-3963 7684
E-mail: tien.mai@binzel-abicor.com.vn

TABLE OF CONTENTS

PLASMA

REPLACEMENT PARTS SUITABLE FOR AJAN®

TORCH	PAGE
HP260A™ mild steel	14

REPLACEMENT PARTS SUITABLE FOR CEBORA®

TORCH	PAGE
HP041™, P50™	15
P70™, CP®200	16
HP100™, MP100™	17
CP®160	18
CP®161	19
CP®251G	20

REPLACEMENT PARTS SUITABLE FOR DAIHEN®/OTC®

TORCH	SYSTEM	PAGE
D-12000	CTPW-1201™, CTZW-1201™	21

REPLACEMENT PARTS SUITABLE FOR ESAB®/L-TEC®

TORCH	PAGE
PT-15™/PT-15XL™	22–23
PT-17A™	24–25
PT-19XLS™/PT-19XL™	26–27
PT-20AM™	28
PT-23™	29
PT-24™	30
PT-25™	31
PT-27™	32
PT-31™/PT-31XL™	33
PT-32™	34
PT-34™	35
PT-36™	36–37
PT-600™	38–39

REPLACEMENT PARTS SUITABLE FOR Hypertherm®

TORCH	SYSTEM	PAGE
PAC®110	MAX®20	40
PAC®120/125T	MAX®40cs/MAX®42/MAX®43	41
PAC®140/M	MAX®40	42
PAC®140/M	HT®40	43

THERMACUT®, FHT-EX® AND EX-TRAFIRE® ARE REGISTERED TRADEMARKS OF THERMACUT, K.S. AND MAY BE REGISTERED IN CZECH REPUBLIC AND/OR OTHER COUNTRIES. ALL OTHER TRADEMARKS ARE PROPERTIES OF THEIR RESPECTIVE OWNERS. THERMACUT IS NO WAY AFFILIATED WITH AJAN®, CEBORA®, DAIHEN®/OTC®, ESAB®/L-TEC®, Hypertherm®.

TABLE OF CONTENTS

PLASMA

REPLACEMENT PARTS SUITABLE FOR Hypertherm®

TORCH	SYSTEM	PAGE
PAC®130/M	MAX®70/MAX®80/MAX®100	44
PAC®110	POWERMAX® 350	45
PAC®123T/M	POWERMAX® 600	46–47
PAC®121T/M / PAC®125T/M	POWERMAX® 800	48–49
PAC®125T/M	POWERMAX® 900	50–51
T60™/T60M™,T80™/T80M™, T100™/T100M™	POWERMAX® 1000 / POWERMAX® 1250 / POWERMAX® 1650	52-53
T60™/T60M™ torch, T80™/T80M™ torch, T100™/T100M™ torch	POWERMAX® 1000 / POWERMAX® 1250 / POWERMAX® 1650	54–55
T60M™/T80M™ machine torch, T60™/T80™ hand torch	POWERMAX® 1000, POWERMAX® 1250	56
T100™/T100M™ machine/hand	POWERMAX® 1650	57
T30v™ hand torch	POWERMAX® 30	58
T30v™/T45v™ hand torch, T45m™ machine torch	POWERMAX® 45	59
DURAMAX® hand torch, DURAMAX® machine torch	POWERMAX® 65 / POWERMAX® 85 / POWERMAX® 105	60–61
PAC®200/T	HT®2000 HySpeed®	62–63
For HT®2000 ms, ss, al	HyPro™2000/MaxPro™200 upgrade torch	64–65
PAC®200T/E	MAX®200	66–67
For MAX®200 ms, ss, al	HyPro™2000/MaxPro™200 upgrade torch	68–69
HT®400	HT®400	70
PAC®170/PAC®600	HT®4000	71
PAC®620 with slave	HT®4001	72–73
PAC®620 without slave	HT®4001	74–75
HT®4400	HT®4400 HySpeed®	76–77
MODEL 500®	PAC®500	78
PAC®182/186/190	HD®1070/HD®3070 HyDefinition®	79
HPR®130/HPR®260 ms	HPR®130/HPR®260	80–81
HPR®130/HPR®260 ss	HPR®130/HPR®260	82–83
HPR®130/HPR®260 al	HPR®130/HPR®260	84–85
Torches and Cable leads	HPR®130/HPR®260	86–87
HPR®130XD/HPR®260XD/HPR®400XD ms	HPR®130XD/HPR®260XD/HPR®400XD	88–89
HPR®130XD/HPR®260XD/HPR®400XD ss	HPR®130XD/HPR®260XD/HPR®400XD	90–91
HPR®130XD/HPR®260XD/HPR®400XD al	HPR®130XD/HPR®260XD/HPR®400XD	92–93
Torches and Cable leads	HPR®130XD/HPR®260XD/HPR®400XD	94–95
HSD®130 ms	HySpeed® Plasma	96

THERMACUT®, FHT-EX® AND EX-TRAFIRE® ARE REGISTERED TRADEMARKS OF THERMACUT, K.S. AND MAY BE REGISTERED IN CZECH REPUBLIC AND/OR OTHER COUNTRIES. ALL OTHER TRADEMARKS ARE PROPERTIES OF THEIR RESPECTIVE OWNERS. THERMACUT IS NO WAY AFFILIATED WITH Hypertherm®.

TABLE OF CONTENTS

PLASMA

REPLACEMENT PARTS SUITABLE FOR Hypertherm®

TORCH	SYSTEM	PAGE
HSD®130 ss	HySpeed® Plasma	97
HSD®130 al	HySpeed® Plasma	98

REPLACEMENT PARTS SUITABLE FOR KALIBURN®

TORCH	SYSTEM	PAGE
SPIRIT® 150a, 200a, 275a, 400a, ProLine™ 2150, 2200, 2260 ms	SPIRIT®, ProLine™	100–101
SPIRIT® 150a, 200a, 275a, 400a, ProLine™ 2150, 2200, 2260 ss	SPIRIT®, ProLine™	102–103
SPIRIT® 150a, 200a, 275a, 400a, ProLine™ 2150, 2200, 2260 al	SPIRIT®, ProLine™	104–105

REPLACEMENT PARTS SUITABLE FOR KJELLBERG®

TORCH	SYSTEM	PAGE
PB-S45W™	PA-S20W™, PA-S25W™, PA-S40W™, PA-S45W™, PA-S70W™	106–107
PB-S47™	FineFocus® 450	108–109
PerCut® 100, PerCut® 101	HiFocus® 100	110–111
PerCut® 160 / PerCut® 170	HiFocus® 160i	112–115
PerCut® 200 / 201 / 210 / 211 / 450M / 451M ms	HiFocus® 160i, HiFocus® 161i, HiFocus® 280i, HiFocus® 360i, HiFocus® 440i	116–117
PerCut® 200 / 201 / 210 / 211 / 450M / 451M ss	HiFocus® 160i, HiFocus® 161i, HiFocus® 280i, HiFocus® 360i, HiFocus® 440i	118–119
PerCut® 370.1, PerCut® 370.2	HiFocus® 280 / HiFocus® 360, HiFocus® 440	120–121
PA-S75™/PB-S75™/PB-S76™/PB-S77™	FineFocus® 800 / FineFocus® 900	122
PB-S80™	FineFocus® 800 / FineFocus® 900	123

REPLACEMENT PARTS SUITABLE FOR KOMATSU®

TORCH	SYSTEM	PAGE
RASOR® KCR-1251, 12714, 9714, 0951	G990™, G9120™ TORCH, 90A	124

THERMACUT®, FHT-EX® AND EX-TRAFIRE® ARE REGISTERED TRADEMARKS OF THERMACUT, K.S. AND MAY BE REGISTERED IN CZECH REPUBLIC AND/OR OTHER COUNTRIES. ALL OTHER TRADEMARKS ARE PROPERTIES OF THEIR RESPECTIVE OWNERS. THERMACUT IS NO WAY AFFILIATED WITH Hypertherm®, KALIBURN®, KJELLBERG®, KOMATSU®.

TABLE OF CONTENTS

PLASMA

REPLACEMENT PARTS SUITABLE FOR MIGATRONIC®

TORCH	PAGE
PLA-45™, PLA-85™	125

REPLACEMENT PARTS SUITABLE FOR SAF®

TORCH	PAGE
OCP 150	126
CP40R, CP100R	127
CPM-200, CPM-250, CPM-300, CPM-720	127

REPLACEMENT PARTS SUITABLE FOR Thermal Dynamics®

TORCH	POWER SUPPLY	PAGE
PCH/M 10/25/38	Drag-Gun®, PakMaster™25, EconoPak™25	128
PCH/M 28/PCH-26	PakMaster™50XL, PakMaster™50XL Plus, EconoPak™50	128
PCH/M 35/40	StakPak™35, PakMaster™50	129
PCH42	(various)	129
PCH/M 51	PAK® 3XR™, 5XR™, 5XT™, 6XR™, 625XR™, 750XR™, Dynapak 4Xi™, 6Xi™	130
PCH/M 52	PAK® 5XR™, 6XR™, 7XR™, 8XR™, 10XR™, 625XR™, 750XR™, 1000XR™, 1250XR™	130
PCH/M-6B	PAK® 44,45	131
PCH/M 150	MERLIN™15XC	132
MAXIMIZER™300/ MERLIN™6000/ MERLIN™6000GST/ PCH/M 120	MERLIN™1000/3000/6000, PAK®15XC, PakMaster™150XL	133
PWH/M 2A / PWH/M 3A / PWH/M 4A	ULTIMA™150	134–136
PWM 300	ULTIMA™150	137

REPLACEMENT PARTS SUITABLE FOR TRAFIMET®

TORCH	PAGE
A53™/S54™ A60™	138
A80™/P80™	139
A90™/P90™	140
A140™/P140™	141
R145™ (Hand) / R145P™ (Machine)	142

THERMACUT®, FHT-EX® AND EX-TRAFIRE® ARE REGISTERED TRADEMARKS OF THERMACUT, K.S. AND MAY BE REGISTERED IN CZECH REPUBLIC AND/OR OTHER COUNTRIES. ALL OTHER TRADEMARKS ARE PROPERTIES OF THEIR RESPECTIVE OWNERS. THERMACUT IS NO WAY AFFILIATED WITH MIGATRONIC®, SAF®, Thermal Dynamics®, TRAFIMET®.

TABLE OF CONTENTS

ACCESSORIES

MANUFACTURER – THERMACUT	PAGE
Coolant Liquid	144
Electrical Conductivity Meter	145
Electrode Pit-Depth Gauge	145
Filter-EX	146
Heat Shield Grease	146
Silicone Lubricant	147
Safety Glass Shield	147
Thermacut consumable case suitable for Hypertherm® HPR®130/HPR®260	148
Thermacut consumable case suitable for Hypertherm® HPR®130XD/HPR®260XD	149
Thermacut consumable case suitable for ESAB® PT-36™	150

Definitions of Suffixes, Symbols & Abbreviations	151
Revision History	152

THERMACUT®, FHT-EX® AND EX-TRAFIRE® ARE REGISTERED TRADEMARKS OF THERMACUT, K.S. AND MAY BE REGISTERED IN CZECH REPUBLIC AND/OR OTHER COUNTRIES. ALL OTHER TRADEMARKS ARE PROPERTIES OF THEIR RESPECTIVE OWNERS. THERMACUT IS NO WAY AFFILIATED WITH Hypertherm®.

PLASMA CUTTING

THERMACUT®
THE CUTTING COMPANY®

REPLACEMENT PARTS SUITABLE FOR
AJAN®

PRODUCT BROCHURE WITH DETAILS AT
WWW.THERMACUT.COM

HP260A™ mild steel

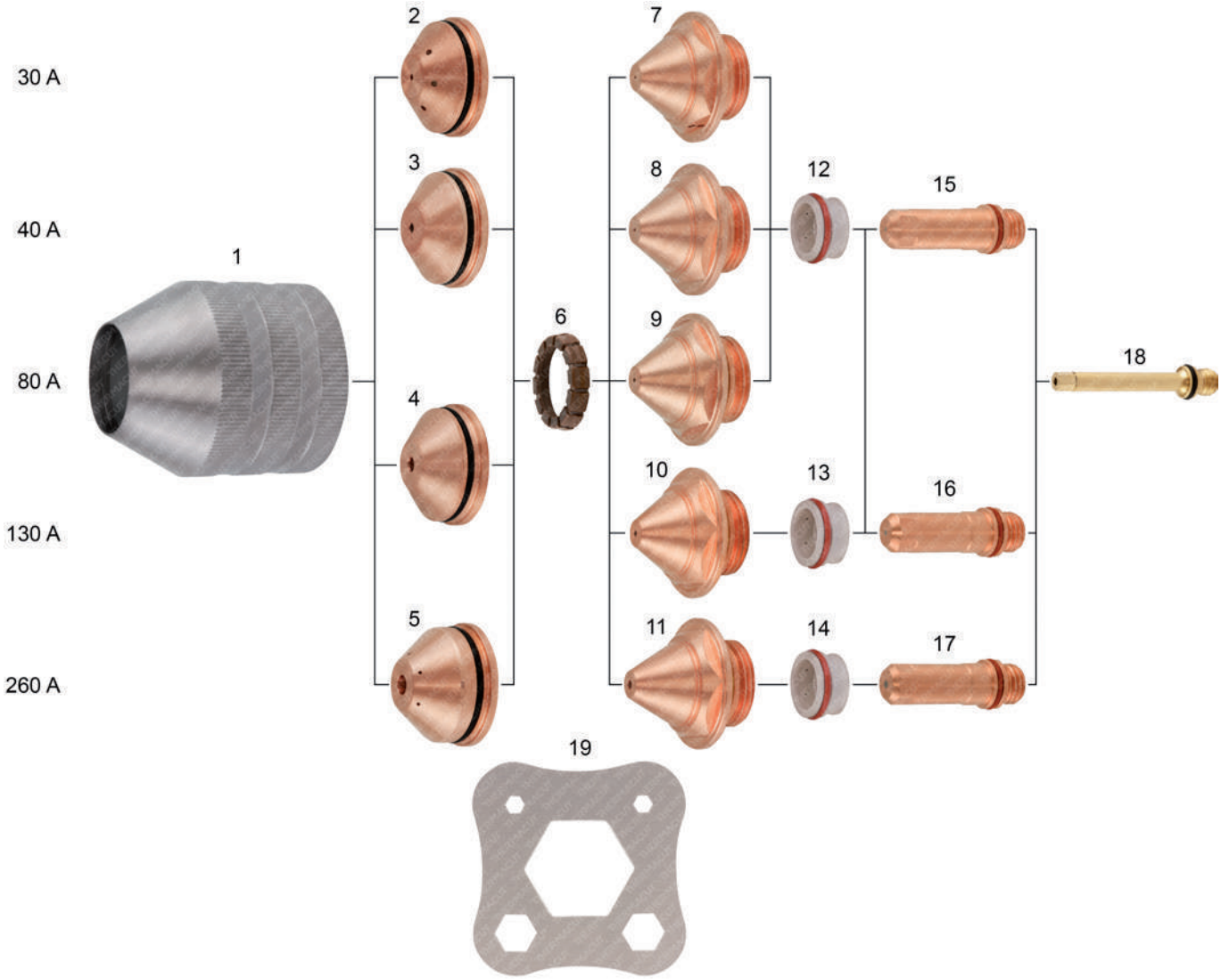

Item	Part No.	Ref. No.	Description	Std. Pkg.	Item	Part No.	Ref. No.	Description	Std. Pkg.
*1.	T-11408	SC2-UR	Shield Cap 30–260A	1	11.	T-11333	N7	Nozzle 260A	1
2.	T-11334	S1	Shield 30A	10	*12.	T-11338	SW1-UR	Swirl Ring 30–80A	1
3.	T-11335	S2	Shield 40A	10	*13.	T-11339	SW2-UR	Swirl Ring 130A	1
4.	T-11336	S3	Shield 80/130A	10	*14.	T-11340	SW3-UR	Swirl Ring 260A	1
5.	T-11337	S4	Shield 260A	5	15.	T-11341	E0	Electrode 30–80A	5
6.	T-11328	G1	Gas Ring 30–260A	1	16.	T-11342	E1	Electrode 130A	5
7.	T-11329	N1	Nozzle 30A	1	17.	T-11343	E3	Electrode 260A	5
8.	T-11330	N2	Nozzle 40A	1	18.	T-11327	B1	Cooling Tube	1
9.	T-11331	N3	Nozzle 80A	1	*19.	T-11351	100-07-106535-UR	Consumable removal tool	1
10.	T-11332	N5	Nozzle 130A	1					

* FULLY INTERCHANGEABLE AND COMPATIBLE WITH ORIGINAL PARTS, BUT DIFFERS FROM ORIGINAL DESIGN

Last update of this page: 17/11/2015. See Revision history for details.

THERMACUT®
THE CUTTING COMPANY

WWW.THERMACUT.CZ
TEL.: +420 556 423 418
SALES@THERMACUT.CZ

WWW.THERMACUT.DE
TEL.: +49 (0) 27 39 40 33 0
INFO@THERMACUT.DE

WWW.THERMACUT.COM
TEL.: 1-603-542-6715
CUSTOMERSERVICE@THERMACUT.COM

THERMACUT®, FHT-EX® AND EX-TRAFIRE® ARE REGISTERED TRADEMARKS OF THERMACUT, K.S. AND MAY BE REGISTERED IN CZECH REPUBLIC AND/OR OTHER COUNTRIES. ALL OTHER TRADEMARKS ARE PROPERTIES OF THEIR RESPECTIVE OWNERS. THERMACUT IS NO WAY AFFILIATED WITH AJAN®.
MOST THERMACUT PARTS ARE MADE FOR OR BY AN IBG COMPANY. PARTS INDICATED WITH A OEM ARE ORIGINAL PARTS MANUFACTURED BY THE ABOVE NAMED MANUFACTURER AND ARE BEING RESOLD BY THERMACUT. THERMACUT RESERVES THE RIGHT TO SUBSTITUTE OEM PARTS IN PLACE OF THERMACUT PARTS.
VALID FROM FEBRUARY 2018 • PREVIOUS VERSION IS NO LONGER VALID. • © COPYRIGHT 2018 BY THERMACUT® CZECH REPUBLIC. ALL RIGHTS RESERVED.

REPLACEMENT PARTS SUITABLE FOR
CEBORA®

HP041™

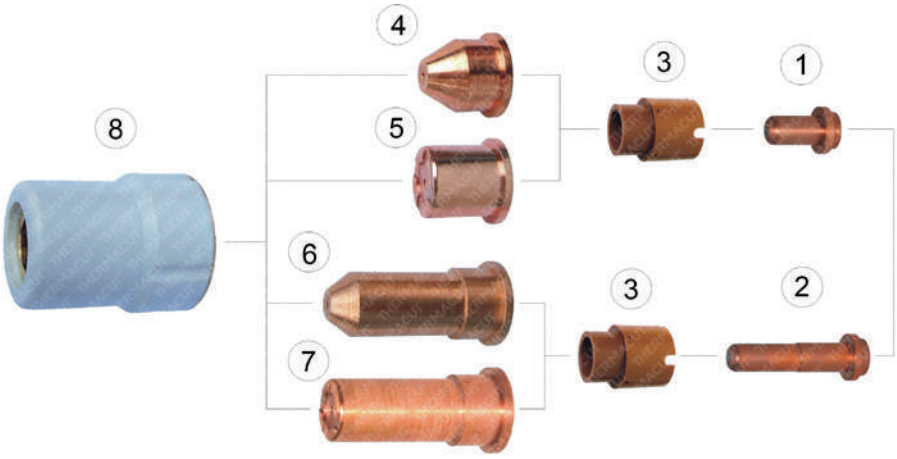

Item	Part No.	Ref. No.	Description	Item	Part No.	Ref. No.	Description
1.	T-0393	1520	Electrode	5.	T-0388	1304	Nozzle
2.	T-0394	1519	Electrode, Long	6.	T-0391	1306	Nozzle, Long Conical
3.	T-0392	1510	Swirl Ring	7.	T-0390	1370	Nozzle, Long
4.	T-0389	1305	Nozzle Conical	8.	T-0387	5710120	Retaining Cap

P50™

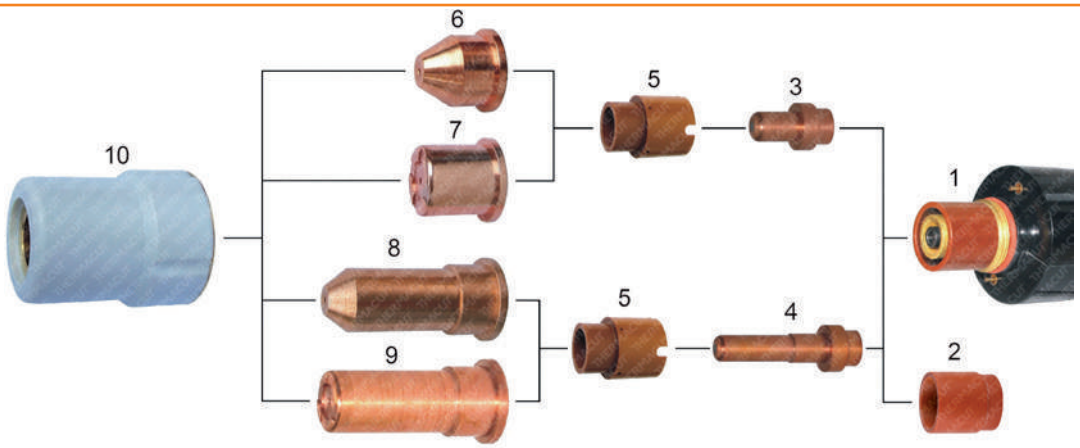

Item	Part No.	Ref. No.	Description	Item	Part No.	Ref. No.	Description
1.	T-0399	1352	Torch Body – Hand		T-1871	1396	Nozzle, Long Life
	T-5439	MP50	Torch Body – Machine	8.	T-0391	1306	Nozzle, Long, Conical
2.	PT-10428	1352-4	Torch Insulator	9.	T-0390	1370	Nozzle, Long
3.	T-0397	1521	Electrode		T-2979	1395	Nozzle, Long, Long Life
4.	T-0398	1518	Electrode, Long	10.	T-0396	5710121	Retaining Cap
5.	T-0392	1510	Swirl Ring	NS	T-5442	1356	Handle with Switch
6.	T-0389	1305	Nozzle Conical	NS	KT-1316	1344	HP50™, HP70™ Cable Leads 6m
7.	T-0388	1304	Nozzle		Different types of cable leads available on request		

Last update of this page: 18/05/2017. See Revision history for details.

THERMACUT®
THE CUTTING COMPANY

WWW.THERMACUT.CZ
TEL.: +420 556 423 418
SALES@THERMACUT.CZ

WWW.THERMACUT.DE
TEL.: +49 (0) 27 39 40 33 0
INFO@THERMACUT.DE

WWW.THERMACUT.COM
TEL.: 1-603-542-6715
CUSTOMERSERVICE@THERMACUT.COM

THERMACUT®, FHT-EX® AND EX-TRAFIRE® ARE REGISTERED TRADEMARKS OF THERMACUT, K.S. AND MAY BE REGISTERED IN CZECH REPUBLIC AND/OR OTHER COUNTRIES. ALL OTHER TRADEMARKS ARE PROPERTIES OF THEIR RESPECTIVE OWNERS. THERMACUT IS NO WAY AFFILIATED WITH CEBORA®.
MOST THERMACUT PARTS ARE MADE FOR OR BY AN IBG COMPANY. PARTS INDICATED WITH A OEM ARE ORIGINAL PARTS MANUFACTURED BY THE ABOVE NAMED MANUFACTURER AND ARE BEING RESOLD BY THERMACUT. THERMACUT RESERVES THE RIGHT TO SUBSTITUTE OEM PARTS IN PLACE OF THERMACUT PARTS.
VALID FROM FEBRUARY 2018 • PREVIOUS VERSION IS NO LONGER VALID. • © COPYRIGHT 2018 BY THERMACUT® CZECH REPUBLIC. ALL RIGHTS RESERVED.

REPLACEMENT PARTS SUITABLE FOR
CEBORA®

P70™

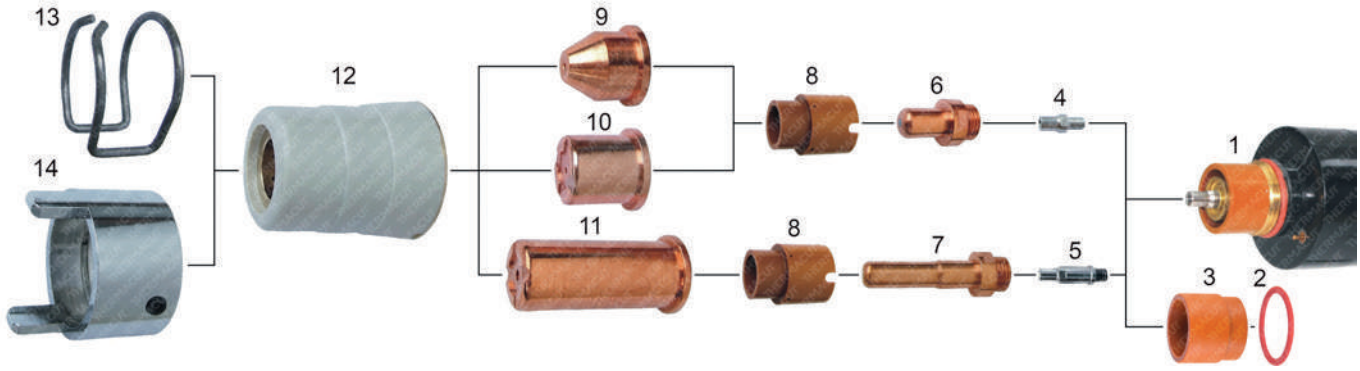

Item	Part No.	Ref. No.	Description	Item	Part No.	Ref. No.	Description
1.	T-1868	1351	Torch Body - Hand	10.	T-4100	1308	Nozzle
	T-1867	1349	Torch Body - Machine		T-1871	1396	Nozzle, Long Life
2.	T-5428	3.160067	O-Ring	11.	T-2979	1395	Nozzle, Long, Long Life
3.	T-8757	1351-4	Torch Insulator	12.	T-5429	5710171	Nozzle Retaining Cap
4.	T-5426	3.065204	Air Diffuser	13.	T-5402	1394	Spacer Spring
5.	PT-10415	1351-1	Air Diffuser, Long	14.	T-5404	1405	Double Pointed Spacer
6.	T-1872	1402	Electrode	NS	T-5442	1356	Handle with Switch
7.	T-5403	1403(1368)	Electrode, Long	NS	KT-1316	1344	HP50™, HP70™ Cable Leads 6m
8.	T-0392	1510	Swirl Ring	NS	KT-1197	1573	HP70™ Torch with Leads 6m with centr. conn.
9.	T-0389	1305	Nozzle, Conical		Different types of cable leads available on request		

CP®200

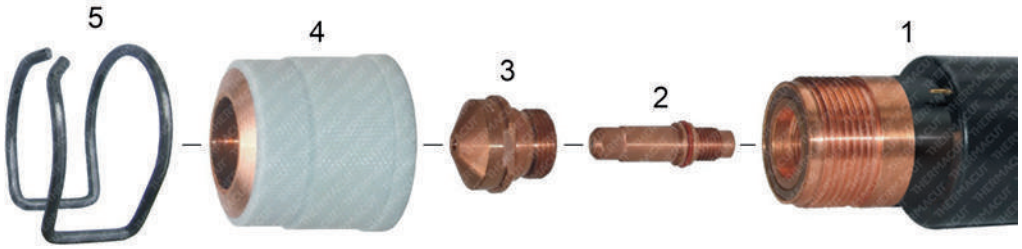

Item	Part No.	Ref. No.	Description	Item	Part No.	Ref. No.	Description
*1.	T-11856*	1357-UR	Machine Torch	5.	T-0400	1386	Spacer Spring
2.	T-9688	1367	Electrode	NS	KT-1319	1235	CP®200 Mach. Torch with Leads 4m, fittings
3.	T-5420	1842	Nozzle, 1.0 mm	NS	KT-1320	K.CP200.4M.K	CP®200 Cable Leads 4m, fittings
	T-5421	1843	Nozzle, 1.3 mm	NS	KT-1321	K.CP200.6M.CK.K	CP®200 Cable Leads 6m with centr. conn.
	T-5422	1844	Nozzle, 1.6 mm	NS	KT-1125	1234	CP®200 Mach. Torch with Leads 6m with centr. conn.
	T-5423	1845	Nozzle, 1.8 mm	NS	KT-1103	1234.10	CP®200 Mach. Torch with Leads 9m with centr. conn.
4.	T-5424	1905	Shield Cap	NS	KT-1104	K.CP200.9M.CK.K	CP®200 Cable Leads 9m with centr. conn.

* FULLY INTERCHANGEABLE AND COMPATIBLE WITH ORIGINAL PARTS, BUT DIFFERS FROM ORIGINAL DESIGN

NS NOT SHOWN IN THE PICTURE

Last update of this page: 15/02/2018. See Revision history for details.

THERMACUT®
THE CUTTING COMPANY

WWW.THERMACUT.CZ
TEL.: +420 556 423 418
SALES@THERMACUT.CZ

WWW.THERMACUT.DE
TEL.: +49 (0) 27 39 40 33 0
INFO@THERMACUT.DE

WWW.THERMACUT.COM
TEL.: 1-603-542-6715
CUSTOMERSERVICE@THERMACUT.COM

THERMACUT®, FHT-EX® AND EX-TRAFIRE® ARE REGISTERED TRADEMARKS OF THERMACUT, K.S. AND MAY BE REGISTERED IN CZECH REPUBLIC AND/OR OTHER COUNTRIES. ALL OTHER TRADEMARKS ARE PROPERTIES OF THEIR RESPECTIVE OWNERS. THERMACUT IS NO WAY AFFILIATED WITH CEBORA®.
MOST THERMACUT PARTS ARE MADE FOR OR BY AN IBG COMPANY. PARTS INDICATED WITH A OEM ARE ORIGINAL PARTS MANUFACTURED BY THE ABOVE NAMED MANUFACTURER AND ARE BEING RESOLD BY THERMACUT. THERMACUT RESERVES THE RIGHT TO SUBSTITUTE OEM PARTS IN PLACE OF THERMACUT PARTS.
VALID FROM FEBRUARY 2018 • PREVIOUS VERSION IS NO LONGER VALID. • © COPYRIGHT 2018 BY THERMACUT® CZECH REPUBLIC. ALL RIGHTS RESERVED.

REPLACEMENT PARTS SUITABLE FOR
CEBORA®

HP100™, MP100™

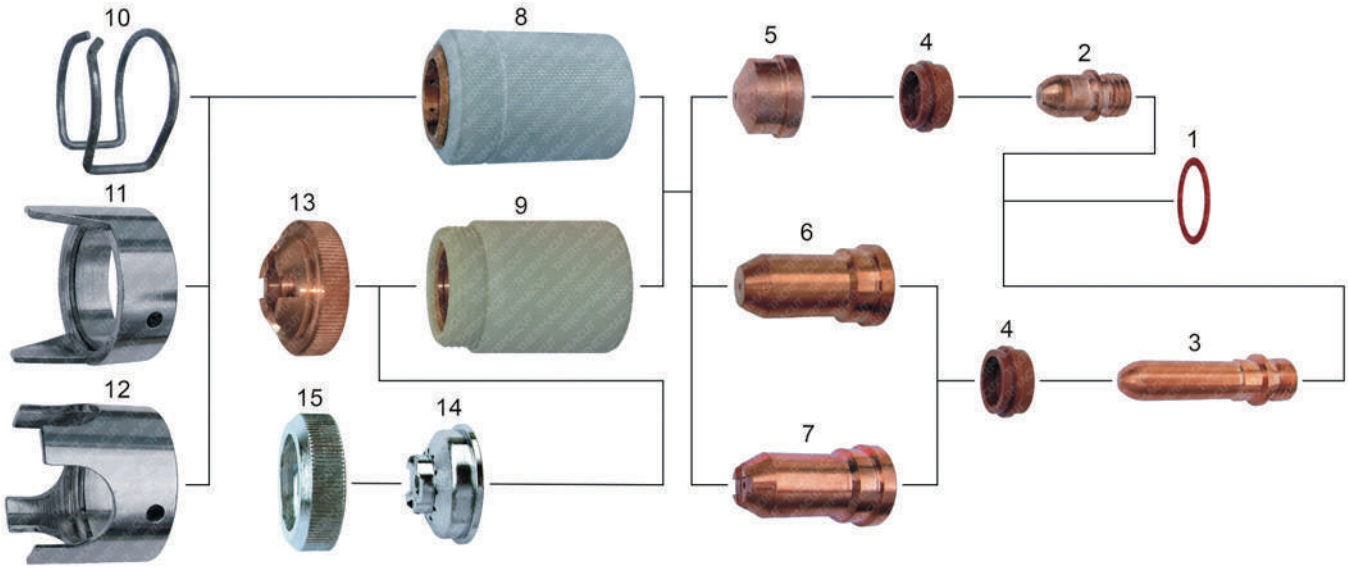

Item	Part No.	Ref. No.	Description	Item	Part No.	Ref. No.	Description
1.	T-0411	1398	O-Ring	7.	T-0406	1369	Nozzle, Long, Contact
2.	T-0408	1376	Electrode	8.	T-5432	W0300129	Retaining Cap
3.	T-0409	1517	Electrode, Long	9.	T-5433	W0300138	Contact Nozzle Retaining Cap
4.	T-0407	1377	Swirl Ring	10.	T-0400	1386	Spacer Spring
	T-8959	1377-CW	Swirl Ring	11.	T-0643	1408	Double Pointed Spacer
5.	T-0402	1371	Nozzle 1.1mm	12.	T-5003	CV14	Crown Spacer
	T-0403	1372	Nozzle 1.3mm	13.	T-5401	1392	Shield Cup, Only for W0300138
	T-0404	1373	Nozzle 1.6mm	NS	T-5442	1356	Handle with Switch
	T-0405	1374	Nozzle 1.8mm	14.	T-9370		Spacer for Contact Cutting
6.	T-11041	1369.16	Nozzle, Long D1,6 – 120A	15.	T-9375		Locking Nut

Last update of this page: 24/02/17. See Revision history for details.

THERMACUT®
THE CUTTING COMPANY®

WWW.THERMACUT.CZ
TEL.: +420 556 423 418
SALES@THERMACUT.CZ

WWW.THERMACUT.DE
TEL.: +49 (0) 27 39 40 33 0
INFO@THERMACUT.DE

WWW.THERMACUT.COM
TEL.: 1-603-542-6715
CUSTOMERSERVICE@THERMACUT.COM

THERMACUT®, FHT-EX® AND EX-TRAFIRE® ARE REGISTERED TRADEMARKS OF THERMACUT, K.S. AND MAY BE REGISTERED IN CZECH REPUBLIC AND/OR OTHER COUNTRIES. ALL OTHER TRADEMARKS ARE PROPERTIES OF THEIR RESPECTIVE OWNERS. THERMACUT IS NO WAY AFFILIATED WITH CEBORA®.
MOST THERMACUT PARTS ARE MADE FOR OR BY AN IBG COMPANY. PARTS INDICATED WITH A OEM ARE ORIGINAL PARTS MANUFACTURED BY THE ABOVE NAMED MANUFACTURER AND ARE BEING RESOLD BY THERMACUT. THERMACUT RESERVES THE RIGHT TO SUBSTITUTE OEM PARTS IN PLACE OF THERMACUT PARTS.
VALID FROM FEBRUARY 2018 • PREVIOUS VERSION IS NO LONGER VALID. • © COPYRIGHT 2018 BY THERMACUT® CZECH REPUBLIC. ALL RIGHTS RESERVED.

REPLACEMENT PARTS SUITABLE FOR
CEBORA®

CP®160

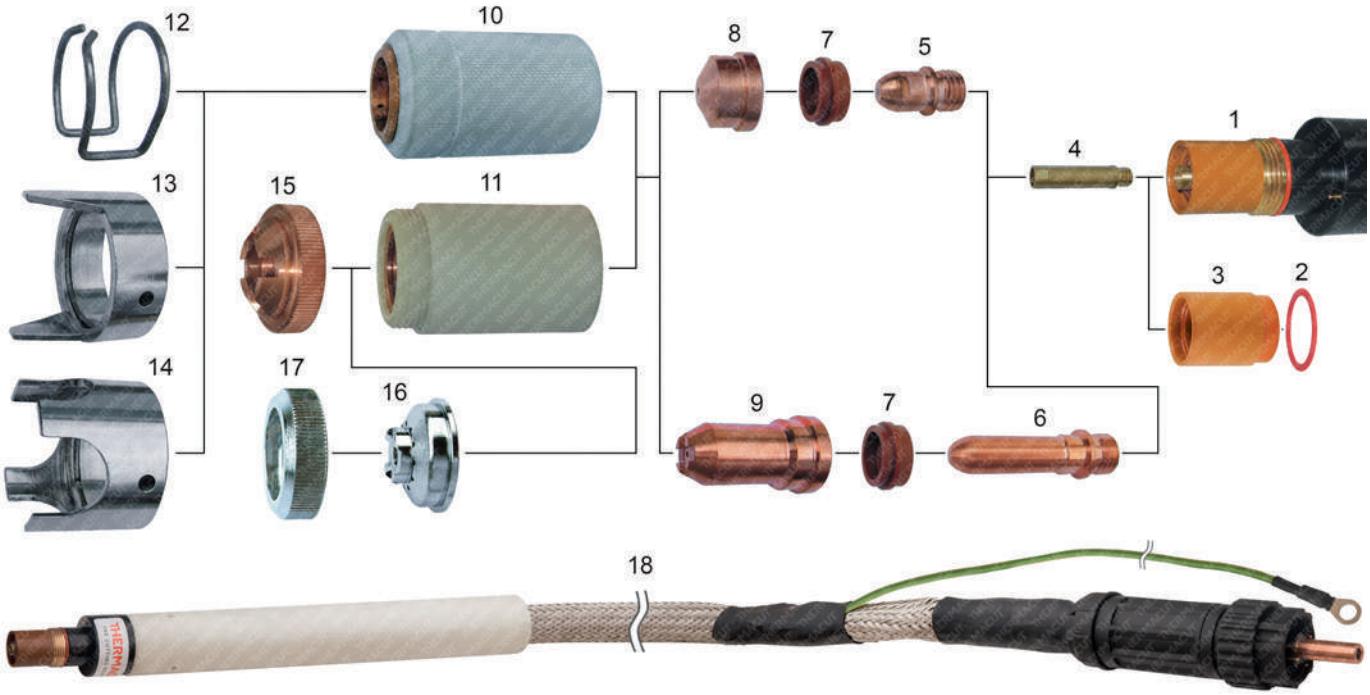

Item	Part No.	Ref. No.	Description	Item	Part No.	Ref. No.	Description
1.	T-8955	1353	Torch Body - Hand	12.	T-0400	1386	Spacer Spring
	T-8746	1354	Torch Body - Machine	13.	T-0643	1408	Double Pointed Spacer
2.	T-0411	1398	O-Ring	14.	T-5003	CV14	Crown Spacer
3.	T-9377	40941	Torch Insulator	15.	T-5401	1392	Shield Cup
4.	T-0410	1378	Brass Diffuser	NS	T-5068	TP10	Handle with Switch
5.	T-0408	1376	Electrode	16.	T-9370		Spacer for contact cutting
6.	T-0409	1517	Electrode, Long	17.	T-9375		Locking Nut
7.	T-0407	1377	Swirl Ring	NS	KT-1048	1576	CP®160-H Torch with Leads 6m with centr. conn.
	T-8959	1377-CW	Swirl Ring	NS	KT-1057	1571	CP®160-H Torch with Leads 6m, fittings
8.	T-0402	1371	Nozzle 1.1mm 50A	NS	KT-1070	K.CP160H.6M.CK.K	CP®160-H Cable Leads, Hand.6m with centr. conn.
	T-0403	1372	Nozzle 1.3mm 90A	NS	KT-1083	1578	CP®160-H Hand Torch with Leads 12m with centr. conn.
	T-0404	1373	Nozzle 1.6mm 120A	18.	KT-1128	1577	CP®160-M Mach.Torch with Leads 6m with centr. conn.
	T-0405	1374	Nozzle 1.8mm 160A		KT-1086	1579	CP®160-M Mach. Torch with Leads 12m with centr. conn.
9.	T-0406	1369	Nozzle, Long	NS	KT-1273	K.CP160M.12M.CK.K	CP®160-M Cable Leads, Mach.12m with centr. conn.
10.	T-0401	1389	Retaining Cap	NS	KT-1419	K.CP160M.12M	CP®160-M Mach. Torch with Leads 12m, fittings
11.	T-5400	1390	Contact Nozzle Retaining Cap		Different types of cable leads available on request		

Last update of this page: 31/03/2017. See Revision history for details.

WWW.THERMACUT.CZ
TEL.: +420 556 423 418
SALES@THERMACUT.CZ

WWW.THERMACUT.DE
TEL.: +49 (0) 27 39 40 33 0
INFO@THERMACUT.DE

WWW.THERMACUT.COM
TEL.: 1-603-542-6715
CUSTOMERSERVICE@THERMACUT.COM

THERMACUT®, FHT-EX® AND EX-TRAFIRE® ARE REGISTERED TRADEMARKS OF THERMACUT, K.S. AND MAY BE REGISTERED IN CZECH REPUBLIC AND/OR OTHER COUNTRIES. ALL OTHER TRADEMARKS ARE PROPERTIES OF THEIR RESPECTIVE OWNERS. THERMACUT IS NO WAY AFFILIATED WITH CEBORA®.
MOST THERMACUT PARTS ARE MADE FOR OR BY AN IBG COMPANY. PARTS INDICATED WITH A OEM ARE ORIGINAL PARTS MANUFACTURED BY THE ABOVE NAMED MANUFACTURER AND ARE BEING RESOLD BY THERMACUT. THERMACUT RESERVES THE RIGHT TO SUBSTITUTE OEM PARTS IN PLACE OF THERMACUT PARTS.
VALID FROM FEBRUARY 2018 • PREVIOUS VERSION IS NO LONGER VALID. • © COPYRIGHT 2018 BY THERMACUT® CZECH REPUBLIC. ALL RIGHTS RESERVED.

REPLACEMENT PARTS SUITABLE FOR
CEBORA®

CP®161

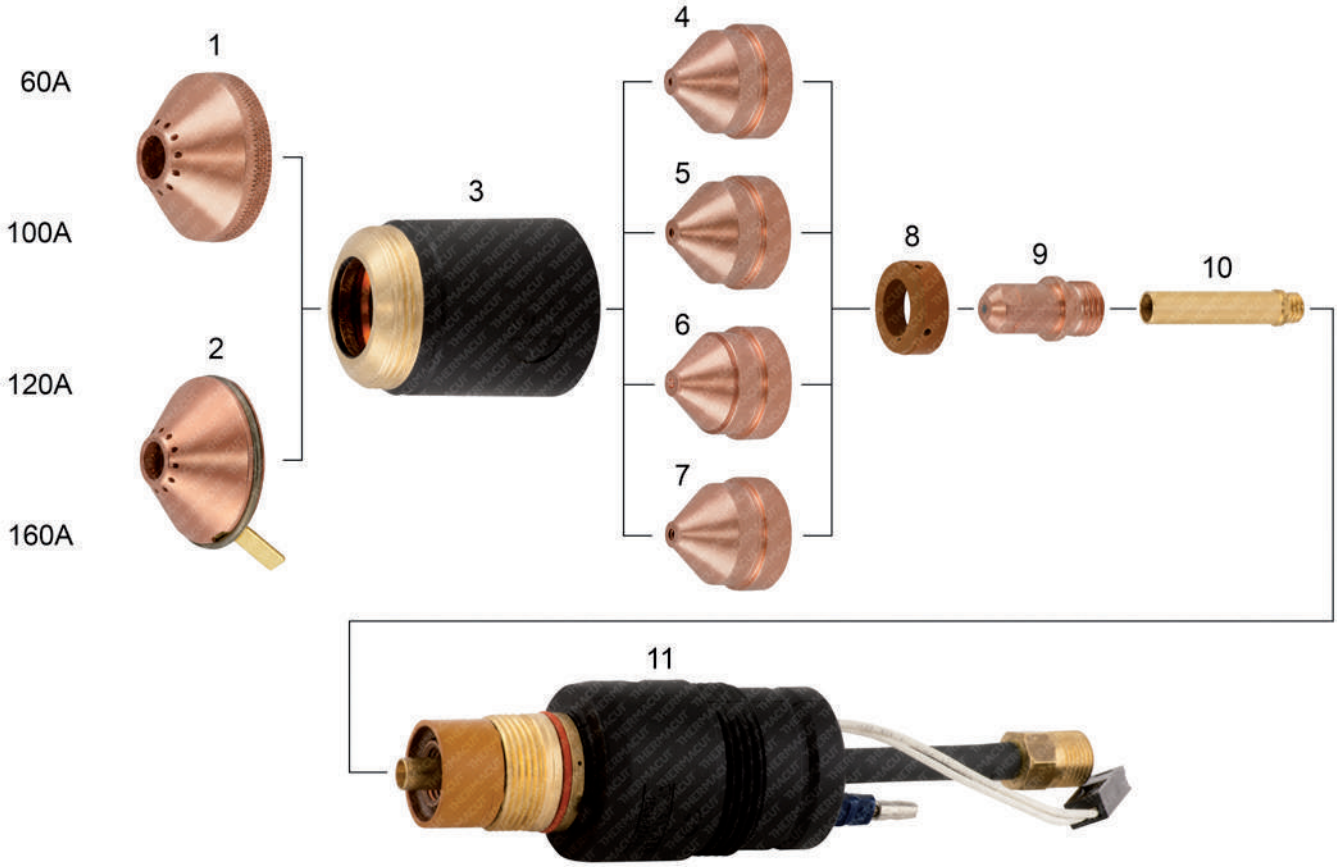

Item	Part No.	Ref. No.	Description	Item	Part No.	Ref. No.	Description
1.	T-11419	1988	Shield – hand	7.	T-11416	1763	Nozzle 160A CP® 1.8mm
2.	T-11421	1989	Shield – machine	8.	T-12365	1970 OEM	Swirl ring
3.	T-12366	1904 OEM	Nozzle holder	9.	T-11418	1876	Electrode
4.	T-11413	1760	Nozzle 60A CP® 1.2mm	10.	T-11412	1619	Brass cooling pipe
5.	T-11414	1761	Nozzle 100A CP® 1.4mm	11.	T-12367	1145 OEM	Torch body – machine
6.	T-11415	1762	Nozzle 120A CP® 1.6mm				

NS NOT SHOWN IN THE PICTURE

Last update of this page: 28/09/2015. See Revision history for details.

THERMACUT®, FHT-EX® AND EX-TRAFIRE® ARE REGISTERED TRADEMARKS OF THERMACUT, K.S. AND MAY BE REGISTERED IN CZECH REPUBLIC AND/OR OTHER COUNTRIES. ALL OTHER TRADEMARKS ARE PROPERTIES OF THEIR RESPECTIVE OWNERS. THERMACUT IS NO WAY AFFILIATED WITH CEBORA®.
MOST THERMACUT PARTS ARE MADE FOR OR BY AN IBG COMPANY. PARTS INDICATED WITH A OEM ARE ORIGINAL PARTS MANUFACTURED BY THE ABOVE NAMED MANUFACTURER AND ARE BEING RESOLD BY THERMACUT. THERMACUT RESERVES THE RIGHT TO SUBSTITUTE OEM PARTS IN PLACE OF THERMACUT PARTS.
VALID FROM FEBRUARY 2018 • PREVIOUS VERSION IS NO LONGER VALID. • © COPYRIGHT 2018 BY THERMACUT® CZECH REPUBLIC. ALL RIGHTS RESERVED.

REPLACEMENT PARTS SUITABLE FOR
CEBORA®

CP®251G

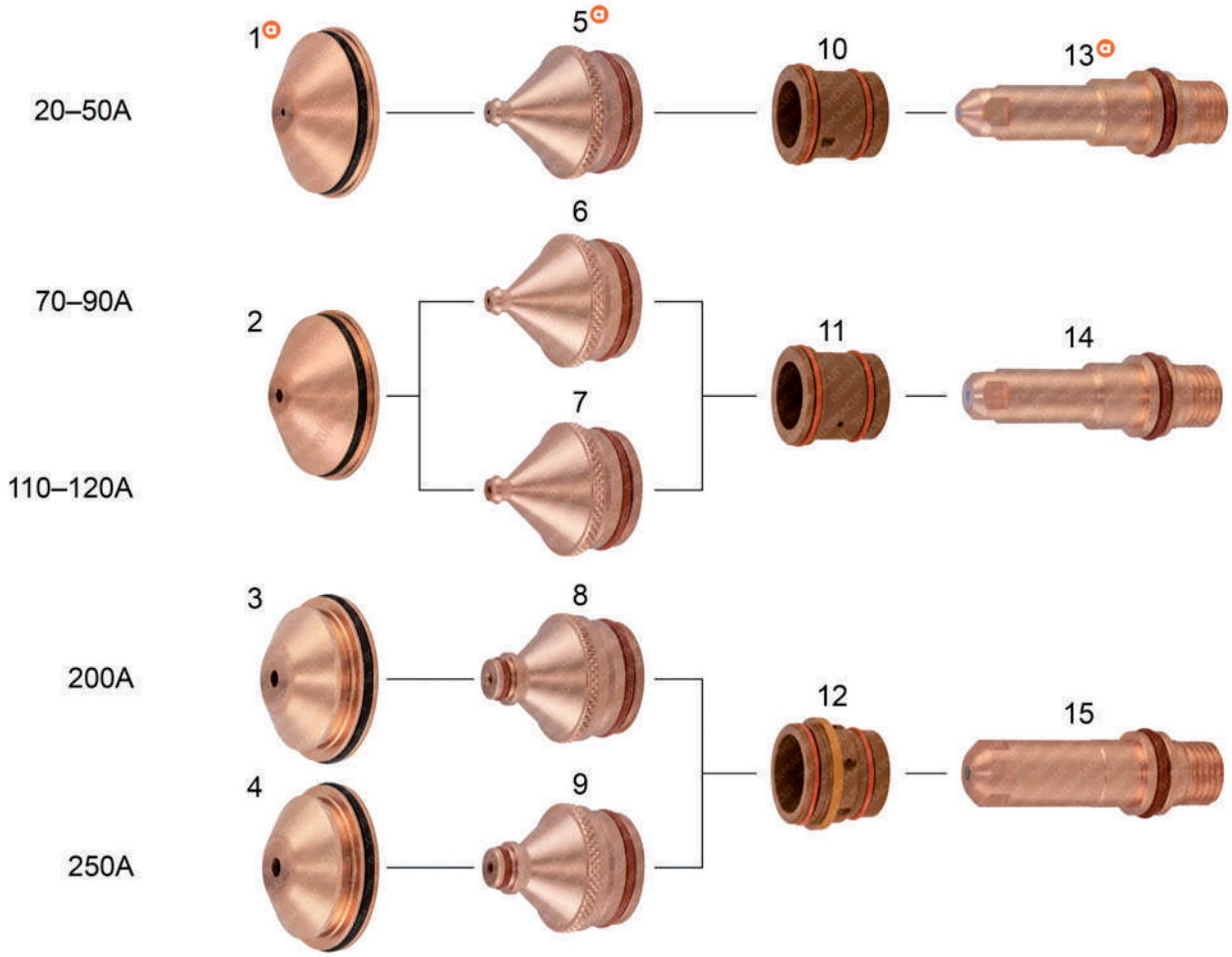

Item	Part No.	Ref. No.	Description	Item	Part No.	Ref. No.	Description
⊙ 1.		1990TD	Shield 20/50A, High Performance	9.	TN-0134	1799	Tip 1.9mm 250A
2.	TN-0130	1990	Shield 70/120A	10.	TN-0123	1968	Swirl Ring 20/50A
3.	TN-0135	1991	Shield 200A	11.	TN-0127	1967	Swirl Ring 70/120A
4.	TN-0136	1993	Shield 250A	12.	TN-0132	1969	Swirl Ring 200/250A
⊙ 5.	TN-0124	1852TD	Tip 0.8mm 20/50A, High Performance	⊙ 13.	TN-0122	1872TD	Electrode 20/50A High Performance
6.	TN-0128	1853	Tip 1.1mm 70/90A	14.	TN-0126	1870	Electrode 70/120A
7.	TN-0129	1854	Tip 1.3mm 110/120A	15.		1874	Electrode 200/250A
8.	TN-0133	1798	Tip 1.6mm 200A				

⊙ HIGH PERFORMANCE PARTS ARE NOT INTERCHANGEABLE WITH THE ORIGINAL PARTS.

Last update of this page: 02/09/2016. See Revision history for details.

THERMACUT®
THE CUTTING COMPANY

WWW.THERMACUT.CZ
TEL.: +420 556 423 418
SALES@THERMACUT.CZ

WWW.THERMACUT.DE
TEL.: +49 (0) 27 39 40 33 0
INFO@THERMACUT.DE

WWW.THERMACUT.COM
TEL.: 1-603-542-6715
CUSTOMERSERVICE@THERMACUT.COM

THERMACUT®, FHT-EX® AND EX-TRAFIRE® ARE REGISTERED TRADEMARKS OF THERMACUT, K.S. AND MAY BE REGISTERED IN CZECH REPUBLIC AND/OR OTHER COUNTRIES. ALL OTHER TRADEMARKS ARE PROPERTIES OF THEIR RESPECTIVE OWNERS. THERMACUT IS NO WAY AFFILIATED WITH CEBORA®.
MOST THERMACUT PARTS ARE MADE FOR OR BY AN IBG COMPANY. PARTS INDICATED WITH A OEM ARE ORIGINAL PARTS MANUFACTURED BY THE ABOVE NAMED MANUFACTURER AND ARE BEING RESOLD BY THERMACUT. THERMACUT RESERVES THE RIGHT TO SUBSTITUTE OEM PARTS IN PLACE OF THERMACUT PARTS.
VALID FROM FEBRUARY 2018 • PREVIOUS VERSION IS NO LONGER VALID. • © COPYRIGHT 2018 BY THERMACUT® CZECH REPUBLIC. ALL RIGHTS RESERVED.

REPLACEMENT PARTS SUITABLE FOR
DAIHEN®/OTC®

CTPW-1201™, CTZW-1201™
D-12000

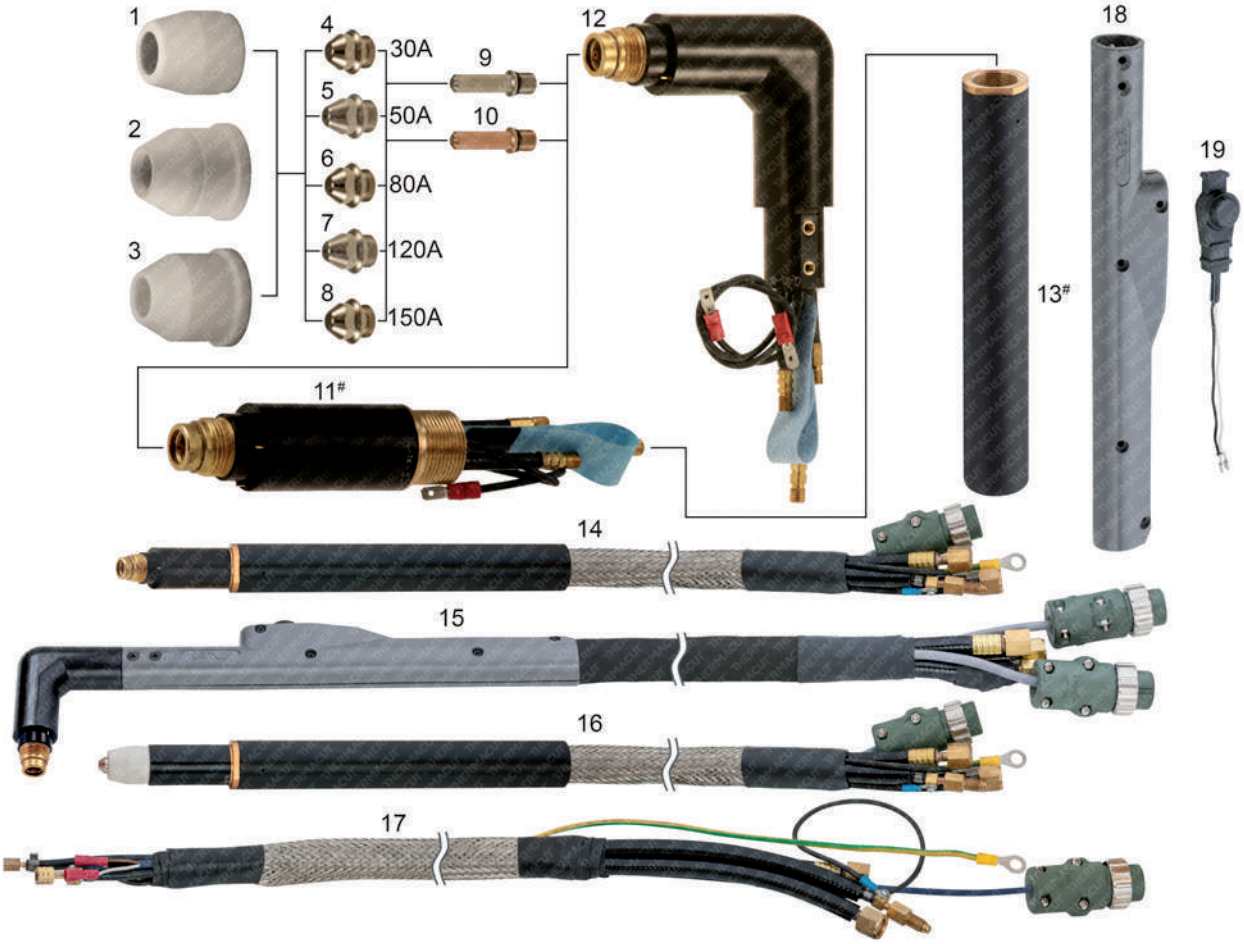

Item	Part No.	Ref. No.	Description	Std. Pkg.	Item	Part No.	Ref. No.	Description	Std. Pkg.
1.	T-1007	H839G02	Shield Cup	1	#13.	T-11295#	T-11295	Tube (use only with H840B00-UR)	1
2.	T-5316	H839G02N	Shield Cup	1	14.	KT-1263	K.CTPW-1201.8M	CTPW-1201™ Machine Torch w/ Leads 8m (26')	1
3.	T-5317	H839G02-T	Shield Cup	1		KT-1049	K.CTPW-1201.10M	CTPW-1201™ Machine Torch w/ Leads 10m (33')	1
4.	T-1008	H839K03	Nozzle, 30A	10		KT-1221	K.CTPW-1201.13M	CTPW-1201™ Machine Torch w/ Leads 13m (42')	1
5.	T-1009	H839K02	Nozzle, 50A	10		KT-1224	K.CTPW-1201.20M	CTPW-1201™ Machine Torch w/ Leads 20m (66')	1
6.	T-1011	H839K01	Nozzle, 80A	10	15.	KT-1314	K.CTZW-1201.10M	CTZW-1201™ Hand Torch w/ Leads 10m (33')	1
7.	T-1012	H839G03	Nozzle, 120A	10	NS	KT-1341	K.CTZW-1201.10M.K	CTZW-1201™ Cable Leads, Hand 10m (33')	1
8.	T-5318	H839G04	Nozzle, 150A	5	16.	KT-1302	DEMO CTPW-1201	Torch+cable leads 0,8m, exhibition only, inoperative	1
*9.	T-9593*	H839M00-UR	Electrode 30–150A, Ni plated	10	17.	KT-1222	K.CTPW-1201.13M.K	CTPW-1201™ Cable Leads, Machine 13m (42')	1
		H839M00G	= H839M00-UR			KT-1225	K.CTPW-1201.20M.K	CTPW-1201™ Cable Leads, Machine 20m (66')	1
10.		H839M00-UR-N	Electrode 30–150A	10	18.	N-18992	H839N00 OEM	Handle	1
#11.	T-1017#	H840B00-UR	Torch Body, Machine (use only with T-11295)	1	19.	N-18993	K2432A00 OEM	Trigger	1
12.	T-5315	H839B00	Torch Body, Hand, 90°	1					

* ELECTRODE H839M00-UR REPLACES OBSOLETE DESCRIPTION H839M00G, HAS SAME DESIGN ONLY REF. NUMBER HAS BEEN CHANGED, ELECTRODE DESIGN IS NOT FULLY COMPATIBLE WITH LATEST JAPANESE OEM TORCHES (CAN CAUSE COOLANT LEAKS).

\# NOT INTERCHANGEABLE WITH OEM. TORCH BODY H840B00-UR AND TUBE T-11295 MUST BE USED TOGETHER AS THE SET, CONNECTION THREAD IS DIFFERENT COMPARED TO OEM.

W/ WITH

Last update of this page: 14/07/2017. See Revision history for details.

THERMACUT®
THE CUTTING COMPANY

WWW.THERMACUT.CZ
TEL.: +420 556 423 418
SALES@THERMACUT.CZ

WWW.THERMACUT.DE
TEL.: +49 (0) 27 39 40 33 0
INFO@THERMACUT.DE

WWW.THERMACUT.COM
TEL.: 1-603-542-6715
CUSTOMERSERVICE@THERMACUT.COM

THERMACUT®, FHT-EX® AND EX-TRAFIRE® ARE REGISTERED TRADEMARKS OF THERMACUT, K.S. AND MAY BE REGISTERED IN CZECH REPUBLIC AND/OR OTHER COUNTRIES. ALL OTHER TRADEMARKS ARE PROPERTIES OF THEIR RESPECTIVE OWNERS. THERMACUT IS NO WAY AFFILIATED WITH DAIHEN®, OTC®.
MOST THERMACUT PARTS ARE MADE FOR OR BY AN IBG COMPANY. PARTS INDICATED WITH A OEM ARE ORIGINAL PARTS MANUFACTURED BY THE ABOVE NAMED MANUFACTURER AND ARE BEING RESOLD BY THERMACUT. THERMACUT RESERVES THE RIGHT TO SUBSTITUTE OEM PARTS IN PLACE OF THERMACUT PARTS.
VALID FROM FEBRUARY 2018 • PREVIOUS VERSION IS NO LONGER VALID. • © COPYRIGHT 2018 BY THERMACUT® CZECH REPUBLIC. ALL RIGHTS RESERVED.

PT-15™, PT-15XL™

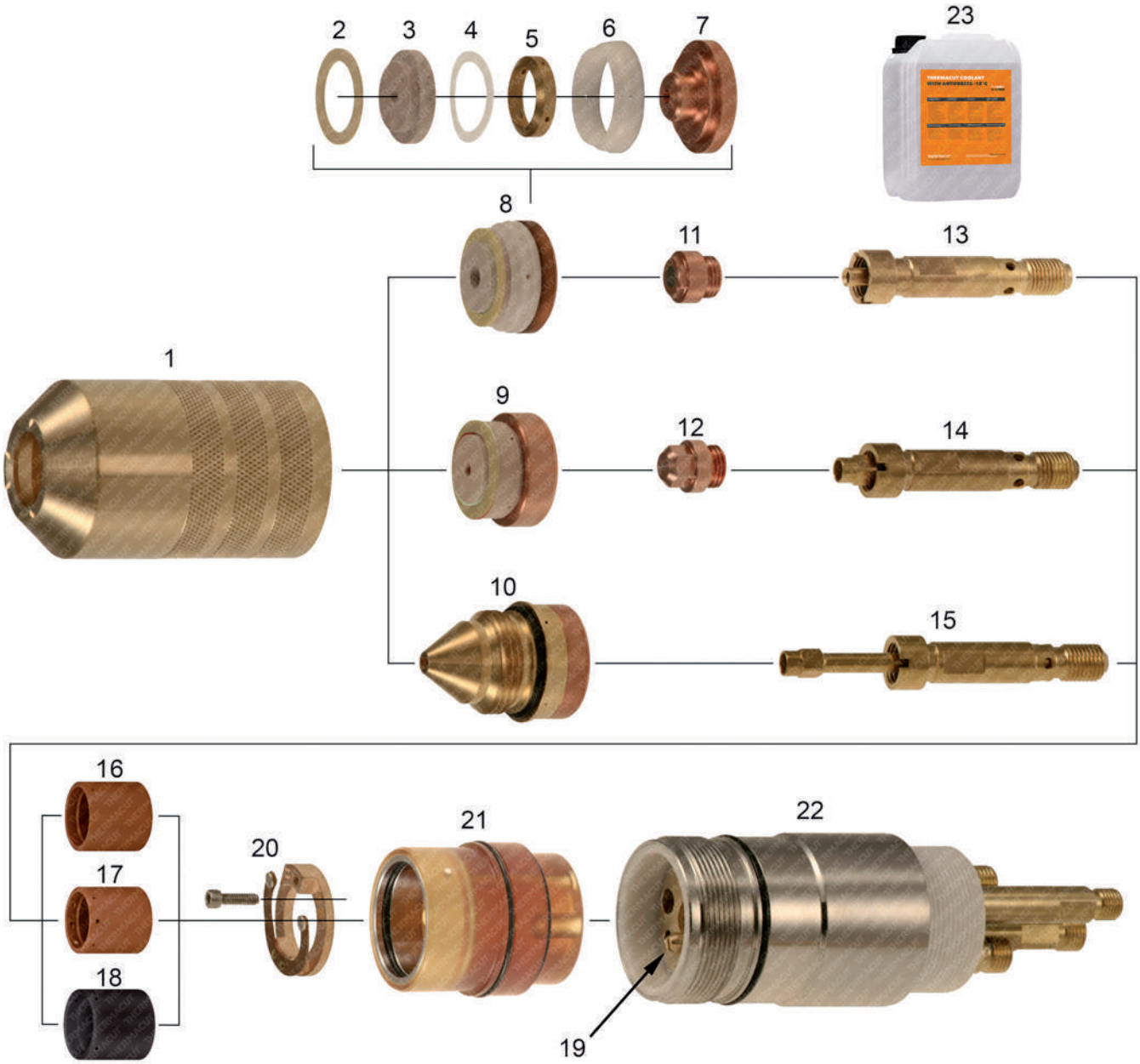

Last update of this page: 02/02/2018. See Revision history for details.

THERMACUT®, FHT-EX® AND EX-TRAFIRE® ARE REGISTERED TRADEMARKS OF THERMACUT, K.S. AND MAY BE REGISTERED IN CZECH REPUBLIC AND/OR OTHER COUNTRIES. ALL OTHER TRADEMARKS ARE PROPERTIES OF THEIR RESPECTIVE OWNERS. THERMACUT IS NO WAY AFFILIATED WITH ESAB®/L-TEC®.
MOST THERMACUT PARTS ARE MADE FOR OR BY AN IBG COMPANY. PARTS INDICATED WITH A OEM ARE ORIGINAL PARTS MANUFACTURED BY THE ABOVE NAMED MANUFACTURER AND ARE BEING RESOLD BY THERMACUT. THERMACUT RESERVES THE RIGHT TO SUBSTITUTE OEM PARTS IN PLACE OF THERMACUT PARTS.
VALID FROM FEBRUARY 2018 • PREVIOUS VERSION IS NO LONGER VALID. • © COPYRIGHT 2018 BY THERMACUT® CZECH REPUBLIC. ALL RIGHTS RESERVED.

REPLACEMENT PARTS SUITABLE FOR
ESAB®/L-TEC®

PT-15™, PT-15XL™

Item	Part No.	Ref. No.	Description	Std. Pkg.	Item	Part No.	Ref. No.	Description	Std. Pkg.
1.	T-0355	20758	Nozzle Retaining Cup, O_2	1	9.	T-1716	35664	Nozzle 340A, O_2	1
NS	T-0356	996230	Retaining Cup	1		T-0339	20751	Nozzle 260A, O_2	1
2.	T-0354	996628	Gasket	5		T-1715	35662	Nozzle 300A, O_2	1
3.	T-0350	2075693	Insulator, 0,140″	1	10.	T-10209	21962	Nozzle Bevel 300A, O_2	1
	T-0351	2075617	Insulator, 0,180″	5	NS	T-11325	0558005866	Nozzle 400A O_2, Bevel	1
	T-0352	2075606	Insulator, 0,225″	5	11.	T-0328	600236	Electrode 250–1000A, N_2	5
	T-0353	2075607	Insulator, 0,260″	1	12.	T-0329	20763	Electrode 260A, O_2	5
	T-1604	2075588	Insulator, 0,500″	5	13.	T-0326	2075343	Electrode Holder	1
NS	T-10683	20409-UR	Insulator	5	14.	T-0327	20398	Electrode Holder	1
4.	T-0349	996619	Spacer	1	15.	T-1253	34084	Electrode Holder	1
5.	T-0346	2075584	Swirl Ring, 4 Hole, CW	1	16.	T-0322	948142	Gas Swirl Baffle, 4 Hole, CW	1
	PT-10567	2075616	Swirl Ring, 4 Hole, CCW	1	17.	T-2019	35660	Gas Swirl Baffle, 8 Hole, CW	1
6.	T-0348	996618	Centering Sleeve	1	18.	T-1869	1361201	Gas Swirl Baffle, 8 Hole, CW	1
7.	T-0345	19810	Nozzle Base 875–1000A	1	19.	T-1247	996242	Locating Pin	5
	T-0342	2075608	Nozzle Base 400A	1	20.	T-1248	21940 OEM	Contact Ring	1
	T-0343	2075609	Nozzle Base 600A	1	21.	T-0319	20755	Insulator	1
	T-0344	2075610	Nozzle Base 750A	1	22.	T-0318	20754	Torch Body, Machine	1
8.	T-0332	2075611	Nozzle 400A, N_2	1	NS	KT-1447	20762	PT-15XL™ Torch with Leads 1,8m (6′)	1
	T-1966	2075612	Nozzle 600A, N_2	1	NS	KT-1159	000128	PT-15XL™ Cable Leads, 1,8m (6′)	1
	T-0333	2075614	Nozzle 400A, N_2, CCW	1	NS	KT-1118	K.PT-15XL.3M.K	PT-15XL™ Cable Leads, 3m (10′)	1
	T-9645	2075615	Nozzle 600A, N_2, CCW	1	NS	KT-1160	000124	PT-15XL™ Cable Leads, 5,1m (17′)	1
	T-10321	20751-UR	Nozzle 260A, O_2	1	NS	KT-1158	000129	PT-15XL™ Cable Leads, 6,1m (20′)	1
	T-0338	2075587	Nozzle 875–1000A, H35	1	NS	KT-1105	000328	PT-15XL™ Cable Leads, 7,6m (25′)	1
	T-1976	2075691	Nozzle 250A, N_2	1	23.	Coolant Liquid. Details on the page 144, section Accessories.			
	T-3584	2075611-2	Nozzle 400A, N_2	1					

CCW COUNTER CLOCK WISE GAS SWIRLING, USE OF CCW PARTS WILL MAKE CUT ANGLE ON THE OPPOSITE SIDE, THAN WITH STANDARD CLOCK WISE (CW) SWIRLING PARTS.

Last update of this page: 02/02/2018. See Revision history for details.

THERMACUT®
THE CUTTING COMPANY®

WWW.THERMACUT.CZ
TEL.: +420 556 423 418
SALES@THERMACUT.CZ

WWW.THERMACUT.DE
TEL.: +49 (0) 27 39 40 33 0
INFO@THERMACUT.DE

WWW.THERMACUT.COM
TEL.: 1-603-542-6715
CUSTOMERSERVICE@THERMACUT.COM

THERMACUT®, FHT-EX® AND EX-TRAFIRE® ARE REGISTERED TRADEMARKS OF THERMACUT, K.S. AND MAY BE REGISTERED IN CZECH REPUBLIC AND/OR OTHER COUNTRIES. ALL OTHER TRADEMARKS ARE PROPERTIES OF THEIR RESPECTIVE OWNERS. THERMACUT IS NO WAY AFFILIATED WITH ESAB®/L-TEC®.
MOST THERMACUT PARTS ARE MADE FOR OR BY AN IBG COMPANY. PARTS INDICATED WITH A OEM ARE ORIGINAL PARTS MANUFACTURED BY THE ABOVE NAMED MANUFACTURER AND ARE BEING RESOLD BY THERMACUT. THERMACUT RESERVES THE RIGHT TO SUBSTITUTE OEM PARTS IN PLACE OF THERMACUT PARTS.
VALID FROM FEBRUARY 2018 • PREVIOUS VERSION IS NO LONGER VALID. • © COPYRIGHT 2018 BY THERMACUT® CZECH REPUBLIC. ALL RIGHTS RESERVED.

REPLACEMENT PARTS SUITABLE FOR
ESAB®/L-TEC®

PT-17A™

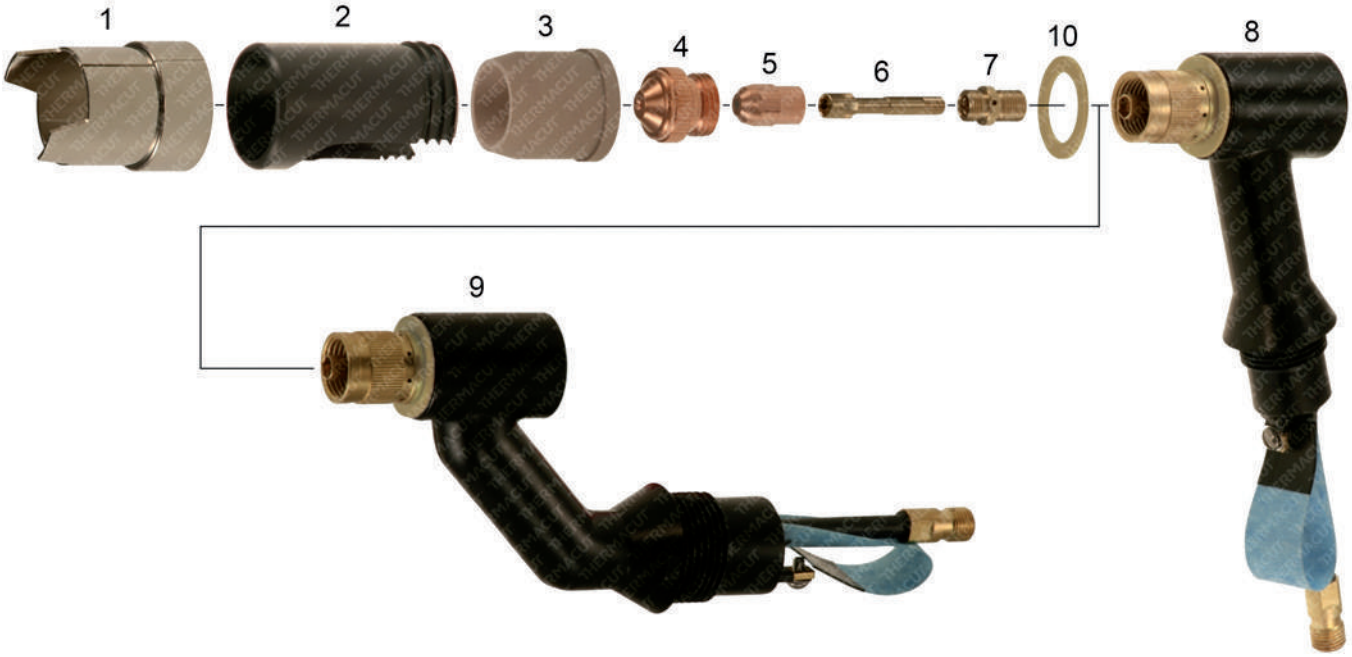

Last update of this page: 02/01/2017. See Revision history for details.

THERMACUT®
THE CUTTING COMPANY

WWW.THERMACUT.CZ
TEL.: +420 556 423 418
SALES@THERMACUT.CZ

WWW.THERMACUT.DE
TEL.: +49 (0) 27 39 40 33 0
INFO@THERMACUT.DE

WWW.THERMACUT.COM
TEL.: 1-603-542-6715
CUSTOMERSERVICE@THERMACUT.COM

THERMACUT®, FHT-EX® AND EX-TRAFIRE® ARE REGISTERED TRADEMARKS OF THERMACUT, K.S. AND MAY BE REGISTERED IN CZECH REPUBLIC AND/OR OTHER COUNTRIES. ALL OTHER TRADEMARKS ARE PROPERTIES OF THEIR RESPECTIVE OWNERS. THERMACUT IS NO WAY AFFILIATED WITH ESAB®/L-TEC®.
MOST THERMACUT PARTS ARE MADE FOR OR BY AN IBG COMPANY. PARTS INDICATED WITH A OEM ARE ORIGINAL PARTS MANUFACTURED BY THE ABOVE NAMED MANUFACTURER AND ARE BEING RESOLD BY THERMACUT. THERMACUT RESERVES THE RIGHT TO SUBSTITUTE OEM PARTS IN PLACE OF THERMACUT PARTS.
VALID FROM FEBRUARY 2018 • PREVIOUS VERSION IS NO LONGER VALID. • © COPYRIGHT 2018 BY THERMACUT® CZECH REPUBLIC. ALL RIGHTS RESERVED.

REPLACEMENT PARTS SUITABLE FOR
ESAB®/L-TEC®

PT-17A™

Item	Part No.	Ref. No.	Description	Std. Pkg.	Item	Part No.	Ref. No.	Description	Std. Pkg.
1.	T-1897	19989	Heat Shield Guard	1	5.	T-0305	19918	Electrode	10
2.	T-1201	19502	Shroud, (=19499)	1	6.	T-1202	19114	Baffle Tube	1
3.	T-0299	19124	Heat Shield	5	7.	T-1203	20053	Electrode Adaptor	1
4.	T-1200	19914	Cutting Tip 30A	5	8.	T-1204	20008	Torch Body 70° – Hand	1
	T-0301	19915	Cutting Tip 50A	5	9.	T-1205	20010	Torch Body, Machine	1
	T-0302	19916	Cutting Tip 70A	5	10.	T-1890	19575	Gasket	1
	T-0303	19917	Cutting Tip 80A	5	NS	T-0300	19124-1	Heat Shield	1
	T-0304	20056	Cutting Tip 100A	5					

Last update of this page: 02/01/2017. See Revision history for details.

THERMACUT®, FHT-EX® AND EX-TRAFIRE® ARE REGISTERED TRADEMARKS OF THERMACUT, K.S. AND MAY BE REGISTERED IN CZECH REPUBLIC AND/OR OTHER COUNTRIES. ALL OTHER TRADEMARKS ARE PROPERTIES OF THEIR RESPECTIVE OWNERS. THERMACUT IS NO WAY AFFILIATED WITH ESAB®/L-TEC®.
MOST THERMACUT PARTS ARE MADE FOR OR BY AN IBG COMPANY. PARTS INDICATED WITH A OEM ARE ORIGINAL PARTS MANUFACTURED BY THE ABOVE NAMED MANUFACTURER AND ARE BEING RESOLD BY THERMACUT. THERMACUT RESERVES THE RIGHT TO SUBSTITUTE OEM PARTS IN PLACE OF THERMACUT PARTS.
VALID FROM FEBRUARY 2018 • PREVIOUS VERSION IS NO LONGER VALID. • © COPYRIGHT 2018 BY THERMACUT® CZECH REPUBLIC. ALL RIGHTS RESERVED.

REPLACEMENT PARTS SUITABLE FOR
ESAB®/L-TEC®

PT-19XLS™

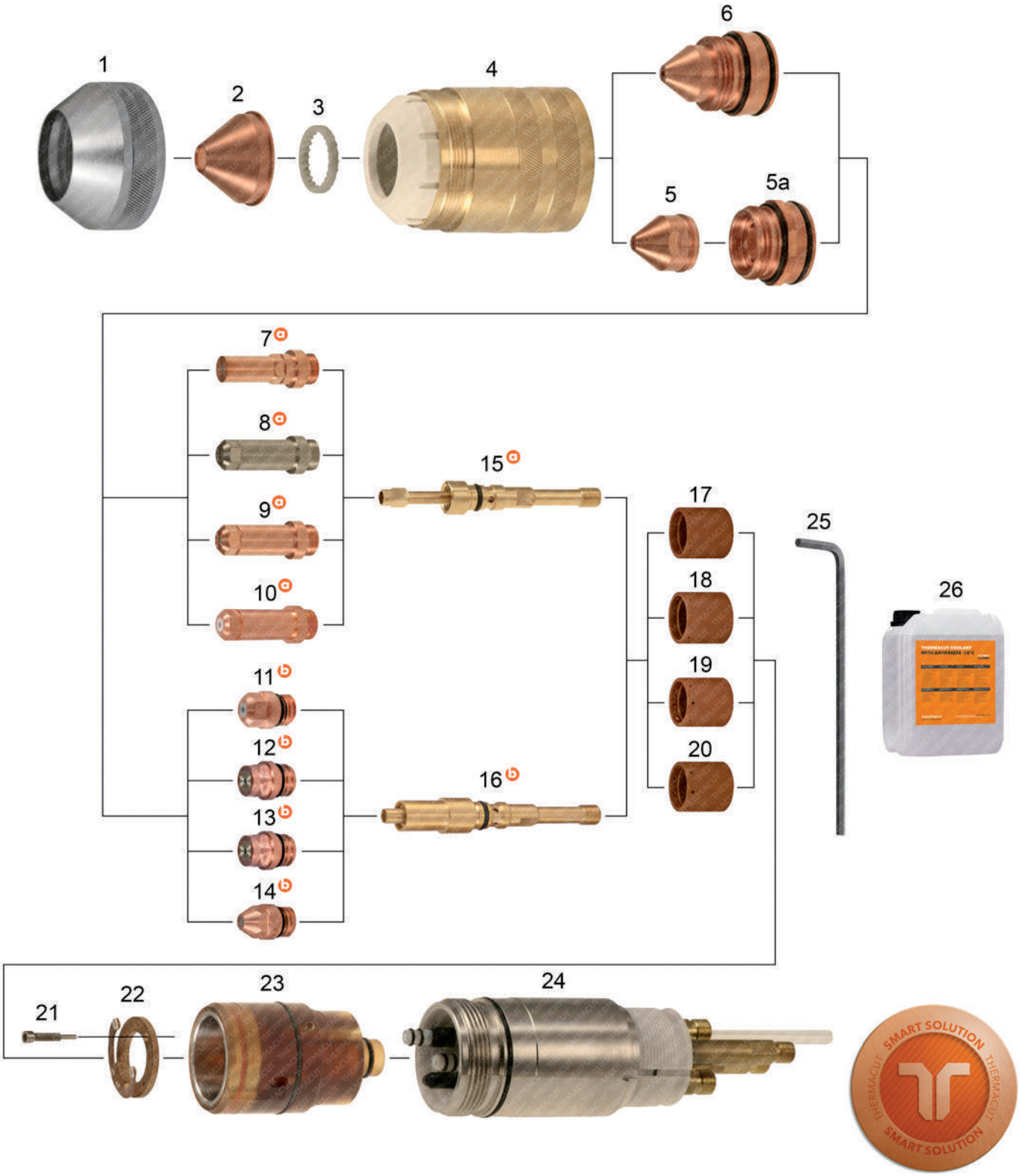

Last update of this page: 02/02/2018. See Revision history for details.

THERMACUT®, FHT-EX® AND EX-TRAFIRE® ARE REGISTERED TRADEMARKS OF THERMACUT, K.S. AND MAY BE REGISTERED IN CZECH REPUBLIC AND/OR OTHER COUNTRIES. ALL OTHER TRADEMARKS ARE PROPERTIES OF THEIR RESPECTIVE OWNERS. THERMACUT IS NO WAY AFFILIATED WITH ESAB®/L-TEC®.
MOST THERMACUT PARTS ARE MADE FOR OR BY AN IBG COMPANY. PARTS INDICATED WITH A OEM ARE ORIGINAL PARTS MANUFACTURED BY THE ABOVE NAMED MANUFACTURER AND ARE BEING RESOLD BY THERMACUT. THERMACUT RESERVES THE RIGHT TO SUBSTITUTE OEM PARTS IN PLACE OF THERMACUT PARTS.
VALID FROM FEBRUARY 2018 • PREVIOUS VERSION IS NO LONGER VALID. • © COPYRIGHT 2018 BY THERMACUT® CZECH REPUBLIC. ALL RIGHTS RESERVED.

REPLACEMENT PARTS SUITABLE FOR
ESAB®/L-TEC®

PRODUCT BROCHURE WITH DETAILS AT
WWW.THERMACUT.COM
VIDEO AVAILABLE AT YOUTUBE CHANEL ▸

PT-19XLS™

Item	Part No.	Ref. No.	Description	Std. Pkg.
1.	T-10128	37081	Shield Retainer	1
2.	T-2266	21802	Shield 100–250A	1
	T-2267	21945	Shield 325–600A	1
	T-4580	21795 OEM	Shield 50A	5
3.	T-2269	21944	Diffuser 100–600A	1
4.	T-10129	37082	Nozzle Retaining Cap	1
5.	T-1720	22026	Nozzle Tip 50A	5
	T-1717	22029	Nozzle Tip 100A	5
	T-1718	22030	Nozzle Tip 150A	5
	T-4197	21822-S	Nozzle Tip 250A	5
5a.	T-1721	22027	Nozzle Base 50A	1
	T-1722	22028	Nozzle Base 100–250A	1
6.	T-2271	21822	Nozzle 250A	1
a 7.	T-10266*	a 35886-UR	Electrode 360A	5
a 8.	T-4905	a 34086XL-AG	Electrode 50–250A, SilverEX®	5
a 9.	T-10262	a 34086-UR	Electrode 50–250A	5
a	T-1252	a 34086	Electrode 50–250A	5
a 10.	T-11857	a 34086-PRO	Electrode 50–250A, Silver PRO	5
b 11.	T-11303	b T-11303-PRO	Electrode 50–250A, Silver PRO	5
b 12.	T-11290*	b 0558003914-PRO	Electrode 100–450A, O_2, Silver PRO	5
b 13.	T-11994	b 0558012000-PRO	Electrode 100–450A, O_2, Silver PRO	5
b 14.	T-11910	b 0558003928-UR	Electrode, N_2/H35	5
	T-10439	0558005459 OEM	Replaced by 0558003914-PRO	3
a 15.	T-2349	a 37068	Electrode Holder	1
b 16.	T-11210	b T-11210	Electrode Holder	1
17.	T-0322	948142	Gas Swirl Baffle, 4 Hole, CW	1
18.	T-0323	948143	Gas Swirl Baffle, 4 Hole, CCW	1
19.	T-2019	35660	Gas Swirl Baffle, 8 Hole, CW	1
20.	T-11659	35661	Gas Swirl Baffle, 8 Hole, CCW	1
21.	T-11942	37073	Screw	1
22.	T-11863	0558003858	Cont. Ring with 2pcs Screws 37073(=37071)	1
23.	T-2351	37083 OEM	Insulator	1
24.	T-3422	37066	Torch Body PT-19XLS™, machine	1
NS	T-1725	20391	Torch Body PT-19XL™, machine	1
NS	T-1337	19483	Sleeve	1
NS	T-1249	948186	Heat Shield	5
NS	T-11202	T-11202	Electrode holder wrench	1
25.	N-20426	93750010	Hex Key Wrench for Contact Ring	1
26.	Coolant Liquid. Details on the page 144, section Accessories.			

a MUST BE USED ONLY AS A SET OF ELECTRODE HOLDER 37068 AND 35886-UR, 34086XL-AG, 34086-UR, 34086, 34086-PRO ELECTRODES.

b MUST BE USED ONLY AS A SET OF ELECTRODE HOLDER T-11210 AND T-11303-PRO, 0558003914-PRO, 0558012000-PRO, 0558003928-UR ELECTRODES.

* A UNIQUE DESIGN WHICH ENHANCES PERFORMANCE AND DIFFERS FROM OEM DESIGNS.

CCW COUNTER CLOCK WISE GAS SWIRLING, USE OF CCW PARTS WILL MAKE CUT ANGLE ON THE OPPOSITE SIDE, THAN WITH STANDARD CLOCK WISE (CW) SWIRLING PARTS.

-PRO SILVER PRO TECHNOLOGY INCREASES ELECTRODE LIFETIME SIGNIFICANTLY COMPARED TO STANDARD COPPER ELECTRODES. SMART SOLUTION – DESIGN IMPROVEMENTS THAT BRINGS ADDED VALUE SUCH AS IMPROVED LIFETIME OF CONSUMABLES, EXCELLENT CUT QUALITY, SPEED OR BETTER COST EFFECTIVENESS OF YOUR SYSTEM.

Last update of this page: 02/02/2018. See Revision history for details.

THERMACUT®
THE CUTTING COMPANY®

WWW.THERMACUT.CZ
TEL.: +420 556 423 418
SALES@THERMACUT.CZ

WWW.THERMACUT.DE
TEL.: +49 (0) 27 39 40 33 0
INFO@THERMACUT.DE

WWW.THERMACUT.COM
TEL.: 1-603-542-6715
CUSTOMERSERVICE@THERMACUT.COM

THERMACUT®, FHT-EX® AND EX-TRAFIRE® ARE REGISTERED TRADEMARKS OF THERMACUT, K.S. AND MAY BE REGISTERED IN CZECH REPUBLIC AND/OR OTHER COUNTRIES. ALL OTHER TRADEMARKS ARE PROPERTIES OF THEIR RESPECTIVE OWNERS. THERMACUT IS NO WAY AFFILIATED WITH ESAB®/L-TEC®.
MOST THERMACUT PARTS ARE MADE FOR OR BY AN IBG COMPANY. PARTS INDICATED WITH A OEM ARE ORIGINAL PARTS MANUFACTURED BY THE ABOVE NAMED MANUFACTURER AND ARE BEING RESOLD BY THERMACUT. THERMACUT RESERVES THE RIGHT TO SUBSTITUTE OEM PARTS IN PLACE OF THERMACUT PARTS.
VALID FROM FEBRUARY 2018 • PREVIOUS VERSION IS NO LONGER VALID. • © COPYRIGHT 2018 BY THERMACUT® CZECH REPUBLIC. ALL RIGHTS RESERVED.

REPLACEMENT PARTS SUITABLE FOR
ESAB®/L-TEC®

PT-20AM™

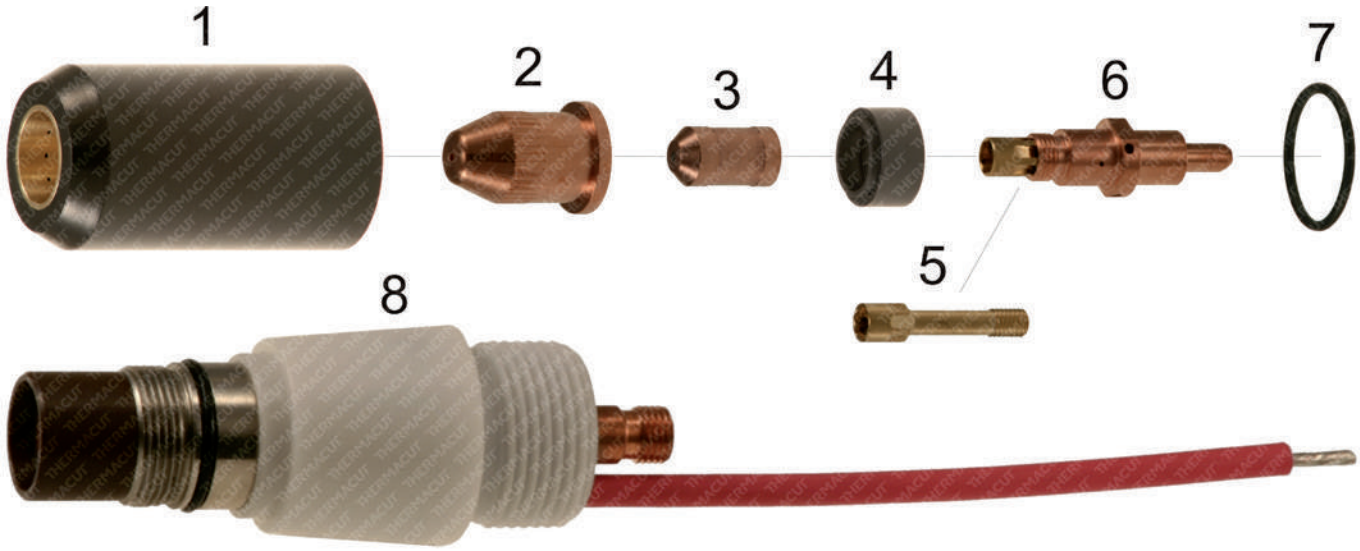

Item	Part No.	Ref. No.	Description	Std. Pkg.	Item	Part No.	Ref. No.	Description	Std. Pkg.
1.	T-1314	21326	Heat Shield 70/100A	1	4.	T-1321	21373	Electrode Insulator	1
	T-1315	21447	Heat Shield 50A	1	5.	T-1322	21374	Baffle Tube	1
2.	T-1316	21330	Nozzle 50A	1	6.	T-1323	21332	Electrode Assy. Holder	1
	T-1317	21329	Nozzle 70A	5	7.	T-1300	488157	O-Ring	1
	T-1318	21328	Nozzle 100A	5	8.	T-1325	21359	Torch Body	1
3.	T-1320	21150	Electrode	10					

Last update of this page: 17/11/2015. See Revision history for details.

THERMACUT®
THE CUTTING COMPANY®

WWW.THERMACUT.CZ
TEL.: +420 556 423 418
SALES@THERMACUT.CZ

WWW.THERMACUT.DE
TEL.: +49 (0) 27 39 40 33 0
INFO@THERMACUT.DE

WWW.THERMACUT.COM
TEL.: 1-603-542-6715
CUSTOMERSERVICE@THERMACUT.COM

THERMACUT®, FHT-EX® AND EX-TRAFIRE® ARE REGISTERED TRADEMARKS OF THERMACUT, K.S. AND MAY BE REGISTERED IN CZECH REPUBLIC AND/OR OTHER COUNTRIES. ALL OTHER TRADEMARKS ARE PROPERTIES OF THEIR RESPECTIVE OWNERS. THERMACUT IS NO WAY AFFILIATED WITH ESAB®/L-TEC®.
MOST THERMACUT PARTS ARE MADE FOR OR BY AN IBG COMPANY. PARTS INDICATED WITH A OEM ARE ORIGINAL PARTS MANUFACTURED BY THE ABOVE NAMED MANUFACTURER AND ARE BEING RESOLD BY THERMACUT. THERMACUT RESERVES THE RIGHT TO SUBSTITUTE OEM PARTS IN PLACE OF THERMACUT PARTS.
VALID FROM FEBRUARY 2018 • PREVIOUS VERSION IS NO LONGER VALID. • © COPYRIGHT 2018 BY THERMACUT® CZECH REPUBLIC. ALL RIGHTS RESERVED.

REPLACEMENT PARTS SUITABLE FOR
ESAB®/L-TEC®

PT-23™

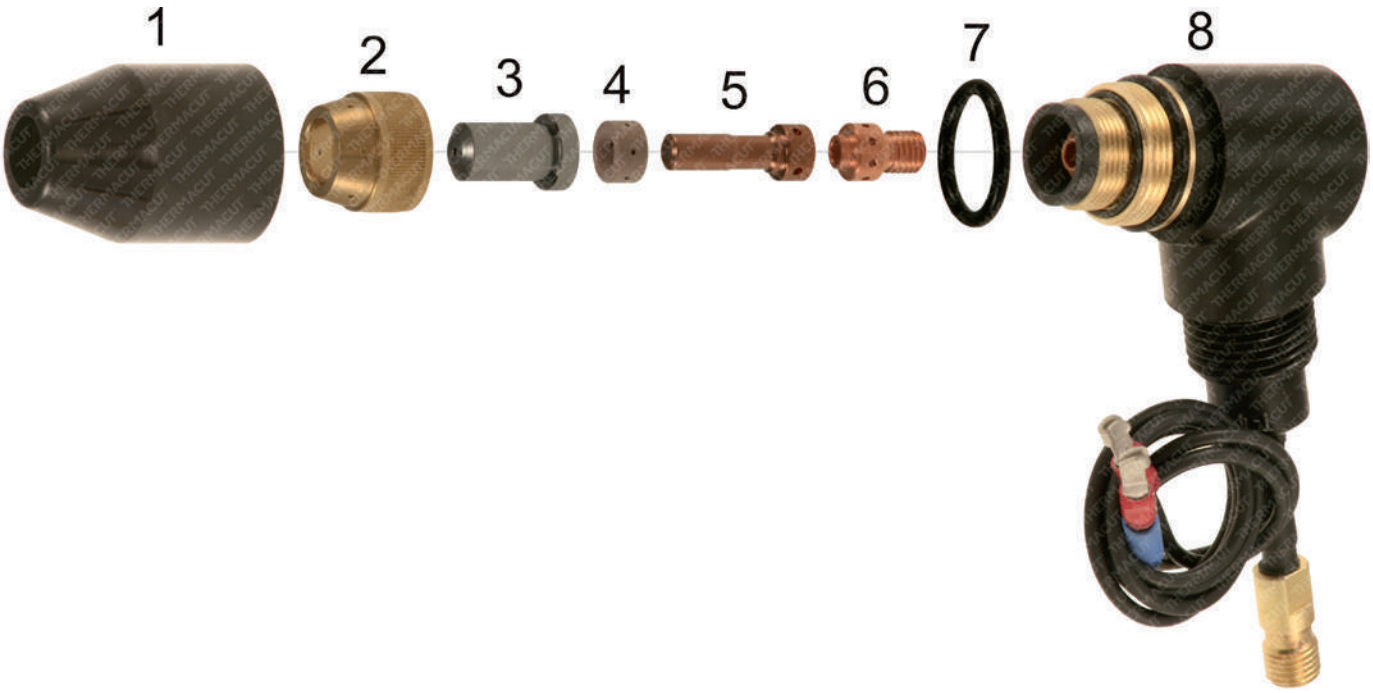

Item	Part No.	Ref. No.	Description	Std. Pkg.	Item	Part No.	Ref. No.	Description	Std. Pkg.
1.	T-1258	33419	Shield	1	5.	T-1264	33366	Electrode	10
2.	T-1259	33371	Retaining Nut	1	6.	T-2016	33417	Replaceable Seat	1
3.	T-1260	33368	Nozzle 30A	10	7.	T-1306	85W51	O-Ring	1
	T-1261	33369	Nozzle 50A	10	8.	T-1265	21421	Torch Head	1
	T-1262	33418	Nozzle 80A	10	NS	T-1986	21420	Stand-off Giude	1
4.	T-1263	33367	Swirl Baffle	5					

Last update of this page: 17/11/2015. See Revision history for details.

THERMACUT®
THE CUTTING COMPANY®

WWW.THERMACUT.CZ
TEL.: +420 556 423 418
SALES@THERMACUT.CZ

WWW.THERMACUT.DE
TEL.: +49 (0) 27 39 40 33 0
INFO@THERMACUT.DE

WWW.THERMACUT.COM
TEL.: 1-603-542-6715
CUSTOMERSERVICE@THERMACUT.COM

THERMACUT®, FHT-EX® AND EX-TRAFIRE® ARE REGISTERED TRADEMARKS OF THERMACUT, K.S. AND MAY BE REGISTERED IN CZECH REPUBLIC AND/OR OTHER COUNTRIES. ALL OTHER TRADEMARKS ARE PROPERTIES OF THEIR RESPECTIVE OWNERS. THERMACUT IS NO WAY AFFILIATED WITH ESAB®/L-TEC®.
MOST THERMACUT PARTS ARE MADE FOR OR BY AN IBG COMPANY. PARTS INDICATED WITH A OEM ARE ORIGINAL PARTS MANUFACTURED BY THE ABOVE NAMED MANUFACTURER AND ARE BEING RESOLD BY THERMACUT. THERMACUT RESERVES THE RIGHT TO SUBSTITUTE OEM PARTS IN PLACE OF THERMACUT PARTS.
VALID FROM FEBRUARY 2018 • PREVIOUS VERSION IS NO LONGER VALID. • © COPYRIGHT 2018 BY THERMACUT® CZECH REPUBLIC. ALL RIGHTS RESERVED.

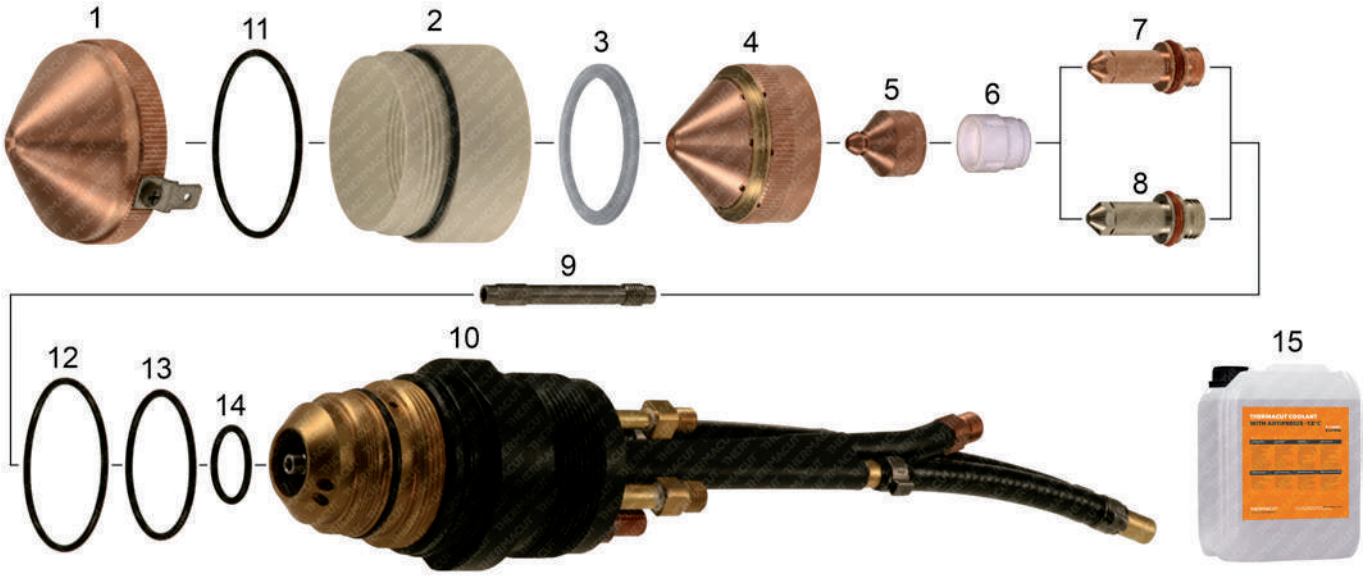

Item	Part No.	Ref. No.	Description	Std. Pkg.	Item	Part No.	Ref. No.	Description	Std. Pkg.
1.	T-10130	22531	Cup Shield with Retainer	1	7.	T-3377	21539	Electrode	5
2.	T-9333	21712	Insulator Shield Retainer	1		T-8987	21539-PRO	Electrode, Silver PRO	5
3.	T-3350	22010	Shield Cap Insulator	1	8.	T-4916	21539-AG	Electrode, SilverEX-®	5
4.	T-3353	22007	Nozzle Retainer/Diffuser	1	9.	PT-10625	21725	Water Baffle	1
5.	T-3370	21540	Nozzle "A" 15A	5	10.	T-3379	21758	PT-24™ Torch Body, Machine	1
	T-3371	21541	Nozzle "B" 30A	5	11.	T-1257	996528	O-Ring	1
	T-3372	21542	Nozzle "C" 50A	5	12.	T-2824	950714	O-Ring	1
	T-3373	21543	Nozzle "D" 70A	5	13.	T-4019	86W62	O-Ring	1
	T-3354	21923	Nozzle "E" 100A	5	14.	T-4018	638797	O-Ring	1
6.	T-3376	21692 OEM	Swirl Baffle 50–100A	1	NS	T-3352	22008	Shield Cup 15/30A, Old Design	1
	T-3374	21852 OEM	Swirl Baffle 15A	1	NS	T-3351	22009	Shield Cup 50/70A, Old Design	1
	T-3375	21536 OEM	Swirl Baffle 30A	1	15.	Coolant Liquid. Details on the page 144, section Accessories.			

-PRO SILVER PRO TECHNOLOGY INCREASES ELECTRODE LIFETIME SIGNIFICANTLY COMPARED TO STANDARD COPPER ELECTRODES

Last update of this page: 24/02/2017. See Revision history for details.

THERMACUT®, FHT-EX® AND EX-TRAFIRE® ARE REGISTERED TRADEMARKS OF THERMACUT, K.S. AND MAY BE REGISTERED IN CZECH REPUBLIC AND/OR OTHER COUNTRIES. ALL OTHER TRADEMARKS ARE PROPERTIES OF THEIR RESPECTIVE OWNERS. THERMACUT IS NO WAY AFFILIATED WITH ESAB®/L-TEC®.
MOST THERMACUT PARTS ARE MADE FOR OR BY AN IBG COMPANY. PARTS INDICATED WITH A OEM ARE ORIGINAL PARTS MANUFACTURED BY THE ABOVE NAMED MANUFACTURER AND ARE BEING RESOLD BY THERMACUT. THERMACUT RESERVES THE RIGHT TO SUBSTITUTE OEM PARTS IN PLACE OF THERMACUT PARTS.
VALID FROM FEBRUARY 2018 • PREVIOUS VERSION IS NO LONGER VALID. • © COPYRIGHT 2018 BY THERMACUT® CZECH REPUBLIC. ALL RIGHTS RESERVED.

REPLACEMENT PARTS SUITABLE FOR
ESAB®/L-TEC®

PT-25™

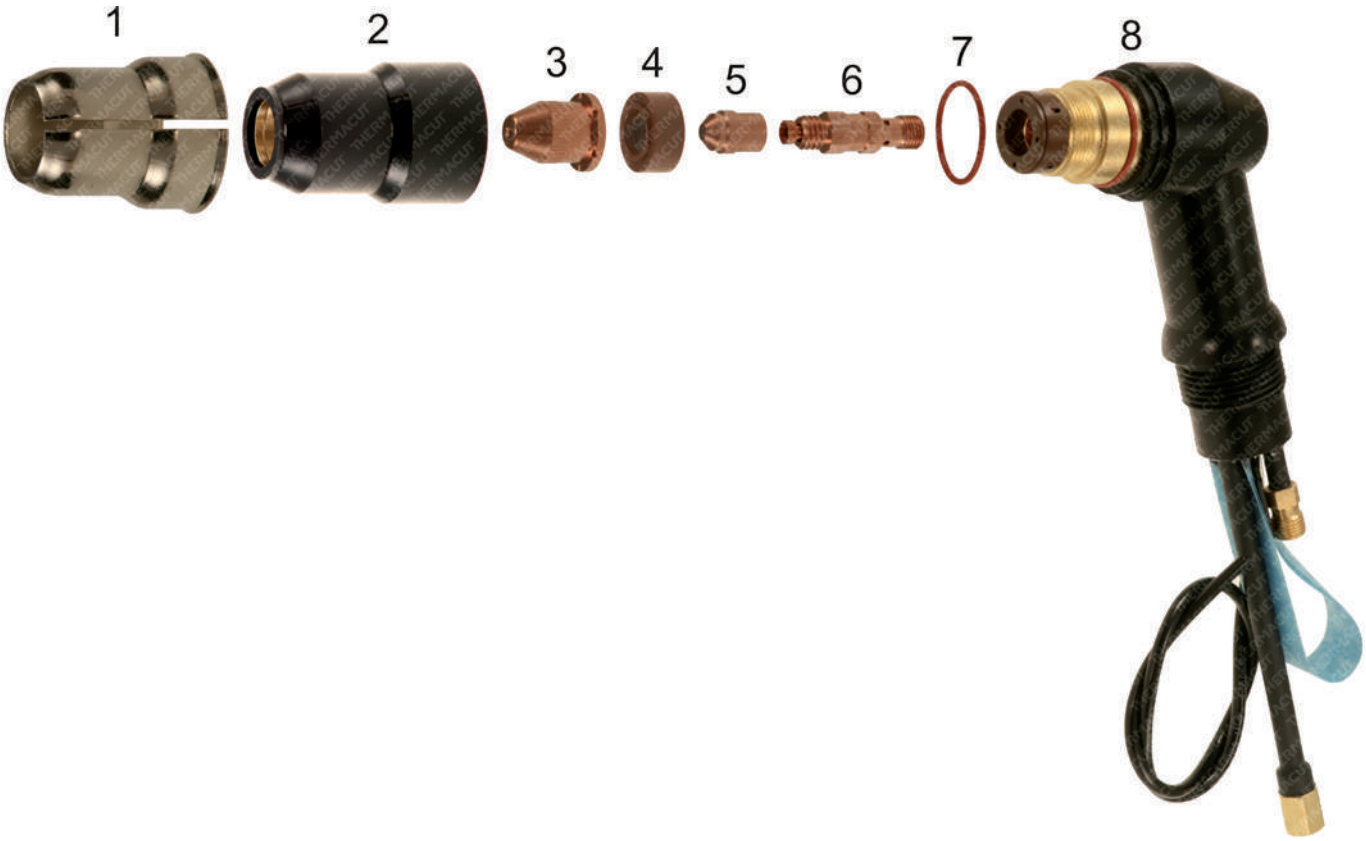

Item	Part No.	Ref. No.	Description	Std. Pkg.	Item	Part No.	Ref. No.	Description	Std. Pkg.
1.	T-2248	21656 OEM	Gouging Guard	1	4.	T-2235	21667	Swirl Baffle	2
2.	T-2250	21654	Heat Shield	1	5.	T-2255	21595	Electrode Air/N_2	5
3.	T-2251	21596	Nozzle 50A	5	6.	T-2256	21657	Electrode Holder	1
	T-2252	21597	Nozzle 100A	5	7.	T-2257	344019	O-Ring	1
	T-2253	21598	Nozzle 150A	5	8.	T-2258	21625	Torch Body 70°	1
	T-2254	21599	Nozzle Nozzle-Gouging	5					

Last update of this page: 17/11/2015. See Revision history for details.

WWW.THERMACUT.CZ
TEL.: +420 556 423 418
SALES@THERMACUT.CZ
WWW.THERMACUT.DE
TEL.: +49 (0) 27 39 40 33 0
INFO@THERMACUT.DE
WWW.THERMACUT.COM
TEL.: 1-603-542-6715
CUSTOMERSERVICE@THERMACUT.COM

THERMACUT®, FHT-EX® AND EX-TRAFIRE® ARE REGISTERED TRADEMARKS OF THERMACUT, K.S. AND MAY BE REGISTERED IN CZECH REPUBLIC AND/OR OTHER COUNTRIES. ALL OTHER TRADEMARKS ARE PROPERTIES OF THEIR RESPECTIVE OWNERS. THERMACUT IS NO WAY AFFILIATED WITH ESAB®/L-TEC®.
MOST THERMACUT PARTS ARE MADE FOR OR BY AN IBG COMPANY. PARTS INDICATED WITH A OEM ARE ORIGINAL PARTS MANUFACTURED BY THE ABOVE NAMED MANUFACTURER AND ARE BEING RESOLD BY THERMACUT. THERMACUT RESERVES THE RIGHT TO SUBSTITUTE OEM PARTS IN PLACE OF THERMACUT PARTS.
VALID FROM FEBRUARY 2018 • PREVIOUS VERSION IS NO LONGER VALID. • © COPYRIGHT 2018 BY THERMACUT® CZECH REPUBLIC. ALL RIGHTS RESERVED.

REPLACEMENT PARTS SUITABLE FOR
ESAB®/L-TEC®

PT-27™

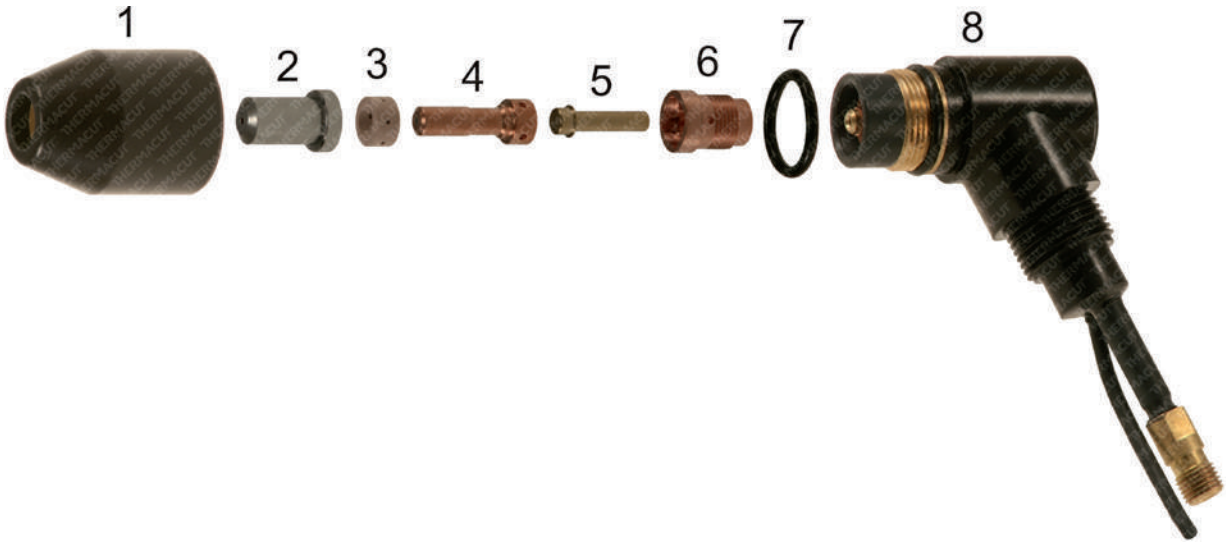

Item	Part No.	Ref. No.	Description	Std. Pkg.	Item	Part No.	Ref. No.	Description	Std. Pkg.
1.	T-1307	21616	Heat Shield	1	6.	T-1310	21615	Replaceable Seat	5
2.	T-1260	33368	Nozzle 0,9mm 30A	10	7.	T-1306	85W51	O-Ring	1
	T-1261	33369	Nozzle 1,2mm 50–70A	10	8.	T-1309	21610	Torch Body 70°	1
	T-1262	33418	Nozzle 1,3mm 80A	10	NS	T-1986	21420	Stand-off Guide	1
	T-0057	35442	Gouging Nozzle 2,4mm	10	NS	PT-10220	0558003032	Seat Assembly	1
3.	T-1263	33367	Swirl Baffle	5	NS	T-3953	0558003027	Seat Instalation Tool	1
4.	T-1264	33366	Electrode	10	NS	KT-1301	21620	PT-27™ Cable Leads, 7,6m (25')	1
5.	T-1308	21619	Valve Pin	5					

NS NOT SHOWN IN THE PICTURE

Last update of this page: 15/02/2018. See Revision history for details.

THERMACUT®, FHT-EX® AND EX-TRAFIRE® ARE REGISTERED TRADEMARKS OF THERMACUT, K.S. AND MAY BE REGISTERED IN CZECH REPUBLIC AND/OR OTHER COUNTRIES. ALL OTHER TRADEMARKS ARE PROPERTIES OF THEIR RESPECTIVE OWNERS. THERMACUT IS NO WAY AFFILIATED WITH ESAB®/L-TEC®.
MOST THERMACUT PARTS ARE MADE FOR OR BY AN IBG COMPANY. PARTS INDICATED WITH A OEM ARE ORIGINAL PARTS MANUFACTURED BY THE ABOVE NAMED MANUFACTURER AND ARE BEING RESOLD BY THERMACUT. THERMACUT RESERVES THE RIGHT TO SUBSTITUTE OEM PARTS IN PLACE OF THERMACUT PARTS.
VALID FROM FEBRUARY 2018 • PREVIOUS VERSION IS NO LONGER VALID. • © COPYRIGHT 2018 BY THERMACUT® CZECH REPUBLIC. ALL RIGHTS RESERVED.

REPLACEMENT PARTS SUITABLE FOR
ESAB®/L-TEC®

PT-31XL™

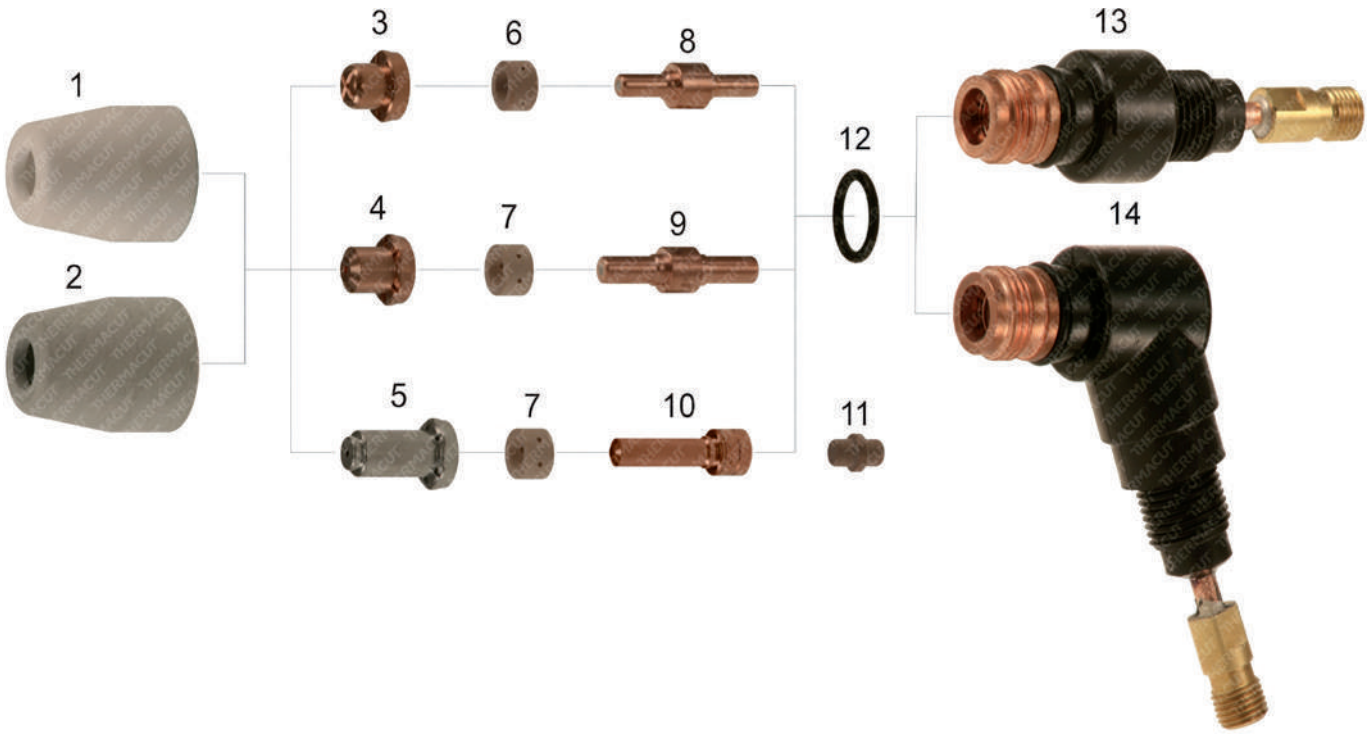

Item	Part No.	Ref. No.	Description	Std. Pkg	Item	Part No.	Ref. No.	Description	Std. Pkg.
1.	T-0289	18204	Heat Shield	10		T-12916	0558000506	Swirl Baffle	5
2.	T-0290	20282	Heat Shield	1	8.	T-0295	18205	Electrode Standard	10
3.	T-0291	18866	Nozzle 30A	10	9.	T-0296	19683	Electrode Heavy Duty	10
4.	T-1297	20079	Nozzle 50A	10	10.	T-1173	20862	Electrode XT	10
5.	T-1174	20860	Nozzle XT 30-40A	10	#11.	T-1172#	20324	Plunger	5
	T-1176	20861	Nozzle XT 50A	10	12.	T-0357	950790	O-Ring	1
	T-1175	21008	Nozzle 35-40A	10	13.	T-0298	20073	Torch Body, Machine	1
6.	T-0293	18785	Swirl Baffle	10	14.	T-0297	20072	Torch Body 70°, Hand	1
7.	T-0294	20463	Swirl Baffle	5	NS	KT-1339	0558003183	PT-31XLPC™ Torch with Leads, 7,6m (25')	1

NON COMPATIBLE WITH THERMACUT TORCH, ONLY FOR OEM TORCH

Last update of this page: 31/07/2016. See Revision history for details.

THERMACUT®, FHT-EX® AND EX-TRAFIRE® ARE REGISTERED TRADEMARKS OF THERMACUT, K.S. AND MAY BE REGISTERED IN CZECH REPUBLIC AND/OR OTHER COUNTRIES. ALL OTHER TRADEMARKS ARE PROPERTIES OF THEIR RESPECTIVE OWNERS. THERMACUT IS NO WAY AFFILIATED WITH ESAB®/L-TEC®.
MOST THERMACUT PARTS ARE MADE FOR OR BY AN IBG COMPANY. PARTS INDICATED WITH A OEM ARE ORIGINAL PARTS MANUFACTURED BY THE ABOVE NAMED MANUFACTURER AND ARE BEING RESOLD BY THERMACUT. THERMACUT RESERVES THE RIGHT TO SUBSTITUTE OEM PARTS IN PLACE OF THERMACUT PARTS.
VALID FROM FEBRUARY 2018 • PREVIOUS VERSION IS NO LONGER VALID. • © COPYRIGHT 2018 BY THERMACUT® CZECH REPUBLIC. ALL RIGHTS RESERVED.

PT-32™

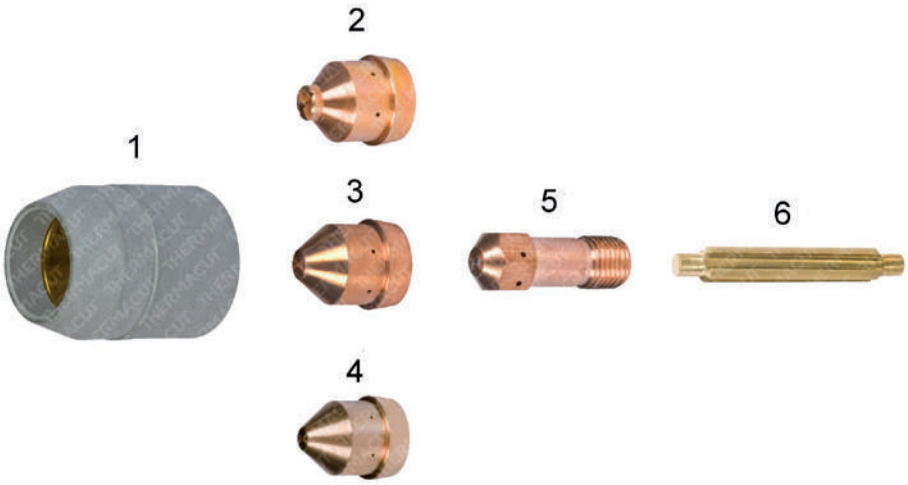

Item	Part No.	Ref. No.	Description	Std. Pkg.	Item	Part No.	Ref. No.	Description	Std. Pkg.
NS	T-10765	0558002393 OEM	Stand-off Guide	1	3.	T-10149	0558002618	Nozzle 70A (i)	5
1.	T-10123	0558001957	Heat Shield	1	4.	T-10151	0558002837	Nozzle 90A (i)	5
NS	T-10173	0558004206 OEM	Heavy Duty Drag Heat Shield	1	5.	T-10148	0558001969	Electrode (i)	5
2.	T-10152	0558002908	Nozzle 40A (i)	5	6.	T-10150	0558001959	Valve Pin (i)	5

(i) THIS PARTS MAY NOT BE DISTRIBUTED ON THE GERMAN, ITALIAN AND GREAT BRITAIN MARKET. THERMACUT ACCEPTS NO RESPONSIBILITY IN CASE OF INDIRECT SALES TO GERMANY, ITALY AND GREAT BRITAIN.

Last update of this page: 17/11/2015. See Revision history for details.

THERMACUT®
THE CUTTING COMPANY

WWW.THERMACUT.CZ
TEL.: +420 556 423 418
SALES@THERMACUT.CZ

WWW.THERMACUT.DE
TEL.: +49 (0) 27 39 40 33 0
INFO@THERMACUT.DE

WWW.THERMACUT.COM
TEL.: 1-603-542-6715
CUSTOMERSERVICE@THERMACUT.COM

THERMACUT®, FHT-EX® AND EX-TRAFIRE® ARE REGISTERED TRADEMARKS OF THERMACUT, K.S. AND MAY BE REGISTERED IN CZECH REPUBLIC AND/OR OTHER COUNTRIES. ALL OTHER TRADEMARKS ARE PROPERTIES OF THEIR RESPECTIVE OWNERS. THERMACUT IS NO WAY AFFILIATED WITH ESAB®/L-TEC®.
MOST THERMACUT PARTS ARE MADE FOR OR BY AN IBG COMPANY. PARTS INDICATED WITH A OEM ARE ORIGINAL PARTS MANUFACTURED BY THE ABOVE NAMED MANUFACTURER AND ARE BEING RESOLD BY THERMACUT. THERMACUT RESERVES THE RIGHT TO SUBSTITUTE OEM PARTS IN PLACE OF THERMACUT PARTS.
VALID FROM FEBRUARY 2018 • PREVIOUS VERSION IS NO LONGER VALID. • © COPYRIGHT 2018 BY THERMACUT® CZECH REPUBLIC. ALL RIGHTS RESERVED.

REPLACEMENT PARTS SUITABLE FOR
ESAB®/L-TEC®

PT-34™

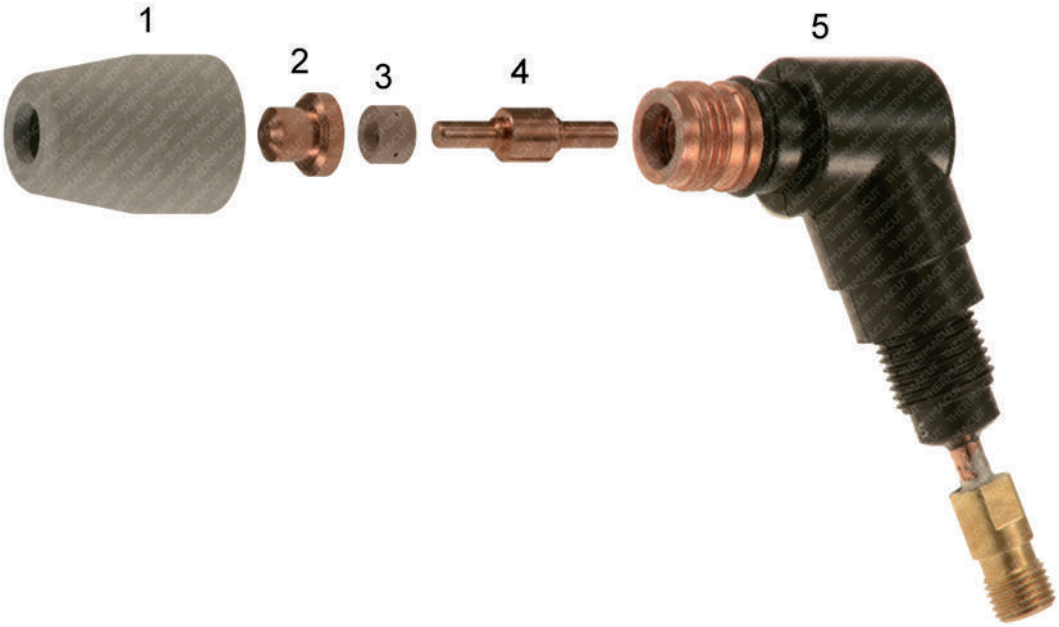

Item	Part No.	Ref. No.	Description	Std. Pkg.	Item	Part No.	Ref. No.	Description	Std. Pkg.
1.	T-0290	20282	Heat Shield	1	4.	T-3314	37888	Electrode	5
2.	T-3315	37887	Nozzle	10	5.	T-0297	20072	Torch Body 70°, Hand	1
3.	T-0293	18785	Swirl Baffle	10					

Last update of this page: 11/04/2016. See Revision history for details.

THERMACUT®, FHT-EX® AND EX-TRAFIRE® ARE REGISTERED TRADEMARKS OF THERMACUT, K.S. AND MAY BE REGISTERED IN CZECH REPUBLIC AND/OR OTHER COUNTRIES. ALL OTHER TRADEMARKS ARE PROPERTIES OF THEIR RESPECTIVE OWNERS. THERMACUT IS NO WAY AFFILIATED WITH ESAB®/L-TEC®.
MOST THERMACUT PARTS ARE MADE FOR OR BY AN IBG COMPANY. PARTS INDICATED WITH A OEM ARE ORIGINAL PARTS MANUFACTURED BY THE ABOVE NAMED MANUFACTURER AND ARE BEING RESOLD BY THERMACUT. THERMACUT RESERVES THE RIGHT TO SUBSTITUTE OEM PARTS IN PLACE OF THERMACUT PARTS.
VALID FROM FEBRUARY 2018 • PREVIOUS VERSION IS NO LONGER VALID. • © COPYRIGHT 2018 BY THERMACUT® CZECH REPUBLIC. ALL RIGHTS RESERVED.

REPLACEMENT PARTS SUITABLE FOR
ESAB®/L-TEC®

PT-36™

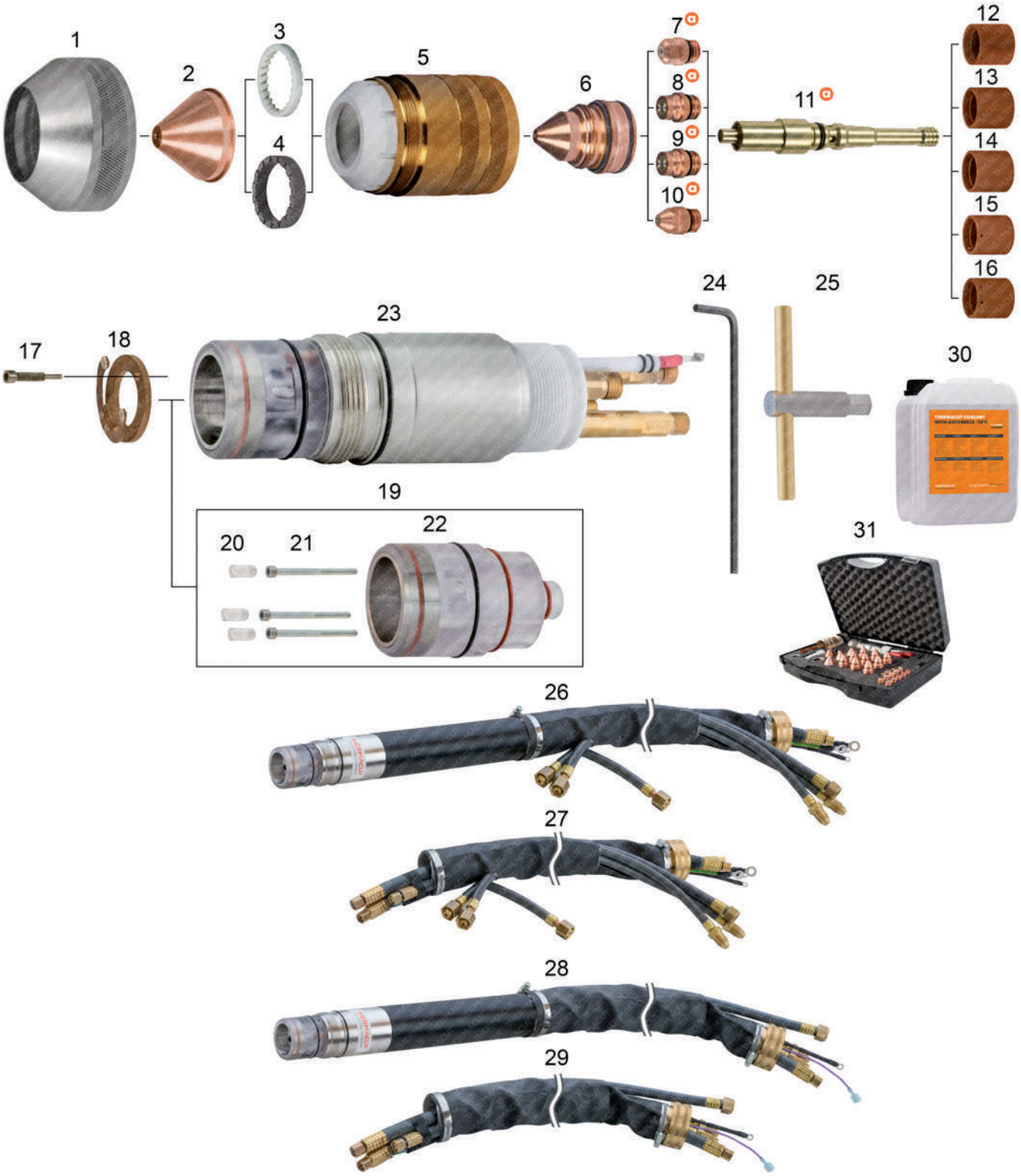

Last update of this page: 02/02/2018. See Revision history for details.

THERMACUT®, FHT-EX® AND EX-TRAFIRE® ARE REGISTERED TRADEMARKS OF THERMACUT, K.S. AND MAY BE REGISTERED IN CZECH REPUBLIC AND/OR OTHER COUNTRIES. ALL OTHER TRADEMARKS ARE PROPERTIES OF THEIR RESPECTIVE OWNERS. THERMACUT IS NO WAY AFFILIATED WITH ESAB®/L-TEC®.
MOST THERMACUT PARTS ARE MADE FOR OR BY AN IBG COMPANY. PARTS INDICATED WITH A OEM ARE ORIGINAL PARTS MANUFACTURED BY THE ABOVE NAMED MANUFACTURER AND ARE BEING RESOLD BY THERMACUT. THERMACUT RESERVES THE RIGHT TO SUBSTITUTE OEM PARTS IN PLACE OF THERMACUT PARTS.
VALID FROM FEBRUARY 2018 • PREVIOUS VERSION IS NO LONGER VALID. • © COPYRIGHT 2018 BY THERMACUT® CZECH REPUBLIC. ALL RIGHTS RESERVED.

PT-36™

Item	Part No.	Ref. No.	Description	Std. Pkg.
1.	T-10128	37081	Shield Retainer	1
2.	T-10463	0558007624	Shield Cup 2,4mm 45–55A	1
	T-10333	0558006130	Shield Cup 3,0mm 35–50A	1
	T-10332	0558006141	Shield Cup 4,1mm 70–280A	1
	T-10334	0558006166	Shield Cup 6,6mm 290–450A	1
	T-10335	0558006199	Shield Cup 9,9mm 300–600A	1
3.	T-2269	21944	Diffuser 100–600A	1
	T-10331	22496	Diffuser 100–600A, CCW	1
4.	T-2268	21796	Gas Diffuser 50A	1
5.	T-10129	37082	Nozzle Retaining Cap, Standard	1
6.	T-10336	0558006010	Nozzle 1,0mm 45/50A MS/SS/AL	1
	T-10337	0558006014	Nozzle 1,4mm 100A MS/AL, 70/130A SS	1
	T-10970	0558006018	Nozzle 1,8mm 100/130A MS, 100A SS/AL	1
	T-10338	0558006020	Nozzle 2,0mm 150/200A MS/AL, 130/150A SS	1
	T-10339	0558006023	Nozzle 2,3mm 200/280A MS, 200A SS, 200/260A AL	1
	T-10340	0558006025	Nozzle 2,5mm 280/290A MS, 260A SS	1
	T-10443	0558006030	Nozzle 3,0mm 325/360A MS, 360A SS/AL	1
	T-10341	0558006036	Nozzle 3,6mm 400A MS, 450A SS	1
	T-10292	0558006041	Nozzle 4,1mm 600A SS/AL	1
⊙ 7.	T-11303 ⊙	T-11303-PRO	Electrode 50–250A, Silver PRO	5
⊙ 8.	T-11290* ⊙	0558003914-PRO	Electrode 100–450A, O_2, Silver PRO	5
⊙ 9.	T-11994 ⊙	0558012000-PRO	Electrode 100–450A, O_2, Silver PRO	5
⊙ 10.	T-11910 ⊙	0558003928-UR	Electrode, N_2/H35	5
	T-10439	0558005459 OEM	Replaced by 0558003914-PRO	3
⊙ 11.	T-11319 ⊙	0558003924-UR	Electrode Holder	1
12.	T-10693	0558005457 OEM	Gas Swirl Baffle, 4 x 0,022, 35–70A	1
13.	T-4607	0558002534	Gas Swirl Baffle, 4 x 0,032, 100–280A, CCW	1
14.	T-4606	0558002533	Gas Swirl Baffle, 4 x 0,032, 100–280A	1
15.	T-4636	0558001625	Gas Swirl Baffle, 8 x 0,047, 300–600A	1
16.	T-11119	0558002530	Gas Swirl Baffle, 8 x 0,047, 360–450A, CCW	1
17.	T-11942	37073	Screw, contact ring	1

Item	Part No.	Ref. No.	Description	Std. Pkg.
18.	T-11863	0558003858	Cont. Ring with 2pcs Screws 37073(=37071)	1
19.	T-12040	T-12040	Exchangeable insulator kit	1
20.	PT-13160	0558001825-11	Plastic screw	1
21.	PT-13159	0558001825-10	Screw	1
22.	PT-12123	0558001825-8	Insulator body	1
23.	T-11208	0558003804	Torch Body PT-36™	1
24.	N-20426	93750010	Hex Key Wrench for Contact Ring	1
25.	T-11665	0558003918 OEM	Electrode Holder Wrench	1
26.	KT-1452	0558006745	PT-36™ Mach. torch with Leads 1,3m	1
	KT-1453	0558006746	PT-36™ Mach. torch with Leads 1,8m	1
	KT-1454	0558006747	PT-36™ Mach. torch with Leads 3,7m	1
	KT-1455	0558006749	PT-36™ Mach. torch with Leads 4,6m	1
	KT-1456	0558006750	PT-36™ Mach. torch with Leads 5,2m	1
	KT-1457	0558006779	PT-36™ Mach. torch with Leads 6,1m	1
	KT-1458	0558006751	PT-36™ Mach. torch with Leads 7,6m	1
27.	KT-1460	0558007031	PT-36™ Cable Leads 1,3m	1
	KT-1461	0558007032	PT-36™ Cable Leads 1,8m	1
	KT-1462	0558007034	PT-36™ Cable Leads 3,7m	1
	KT-1463	0558007036	PT-36™ Cable Leads 4,6m	1
	KT-1464	0558007037	PT-36™ Cable Leads 5,2m	1
	KT-1465	0558007038	PT-36™ Cable Leads 6,1m	1
	KT-1466	0558007039	PT-36™ Cable Leads 7,6m	1
28.	KT-1478	0558003849	PT-36™ Mach. torch with Leads 1,4m	1
	KT-1479	0558003850	PT-36™ Mach. torch with Leads 1,8m	1
	KT-1480	0558003852	PT-36™ Mach. torch with Leads 3,7m	1
	KT-1481	0558003853	PT-36™ Mach. torch with Leads 4,6m	1
	KT-1482	0558003854	PT-36™ Mach. torch with Leads 5,2m	1
	KT-1483	0558003856	PT-36™ Mach. torch with Leads 7,6m	1
29.	Cable Leads are available on request, because of more possible types of fittings.			
30.	Coolant Liquid. Details on the page 144, section Accessories.			
31.	Consumable Case. Details on the page 150, section Accessories.			

* A UNIQUE DESIGN WHICH ENHANCES PERFORMANCE AND DIFFERS FROM OEM DESIGNS

⊙ MUST BE USED AS A SET OF ELECTRODE HOLDER AND ELECTRODE, THIS COMPLETE SET IS INTERCHANGEABLE AND COMPATIBLE WITH ORIGINAL PARTS.

CCW COUNTER CLOCK WISE GAS SWIRLING, USE OF CCW PARTS WILL MAKE CUT ANGLE ON THE OPPOSITE SIDE, THAN WITH STANDARD CLOCK WISE (CW) SWIRLING PARTS.

-PRO SILVER PRO TECHNOLOGY INCREASES ELECTRODE LIFETIME SIGNIFICANTLY COMPARED TO STANDARD COPPER ELECTRODES

Last update of this page: 02/02/2018. See Revision history for details.

WWW.THERMACUT.CZ
TEL.: +420 556 423 418
SALES@THERMACUT.CZ

WWW.THERMACUT.DE
TEL.: +49 (0) 27 39 40 33 0
INFO@THERMACUT.DE

WWW.THERMACUT.COM
TEL.: 1-603-542-6715
CUSTOMERSERVICE@THERMACUT.COM

THERMACUT®, FHT-EX® AND EX-TRAFIRE® ARE REGISTERED TRADEMARKS OF THERMACUT, K.S. AND MAY BE REGISTERED IN CZECH REPUBLIC AND/OR OTHER COUNTRIES. ALL OTHER TRADEMARKS ARE PROPERTIES OF THEIR RESPECTIVE OWNERS. THERMACUT IS NO WAY AFFILIATED WITH ESAB®/L-TEC®.
MOST THERMACUT PARTS ARE MADE FOR OR BY AN IBG COMPANY. PARTS INDICATED WITH A OEM ARE ORIGINAL PARTS MANUFACTURED BY THE ABOVE NAMED MANUFACTURER AND ARE BEING RESOLD BY THERMACUT. THERMACUT RESERVES THE RIGHT TO SUBSTITUTE OEM PARTS IN PLACE OF THERMACUT PARTS.
VALID FROM FEBRUARY 2018 • PREVIOUS VERSION IS NO LONGER VALID. • © COPYRIGHT 2018 BY THERMACUT® CZECH REPUBLIC. ALL RIGHTS RESERVED.

REPLACEMENT PARTS SUITABLE FOR
ESAB®/L-TEC®

PT-600™

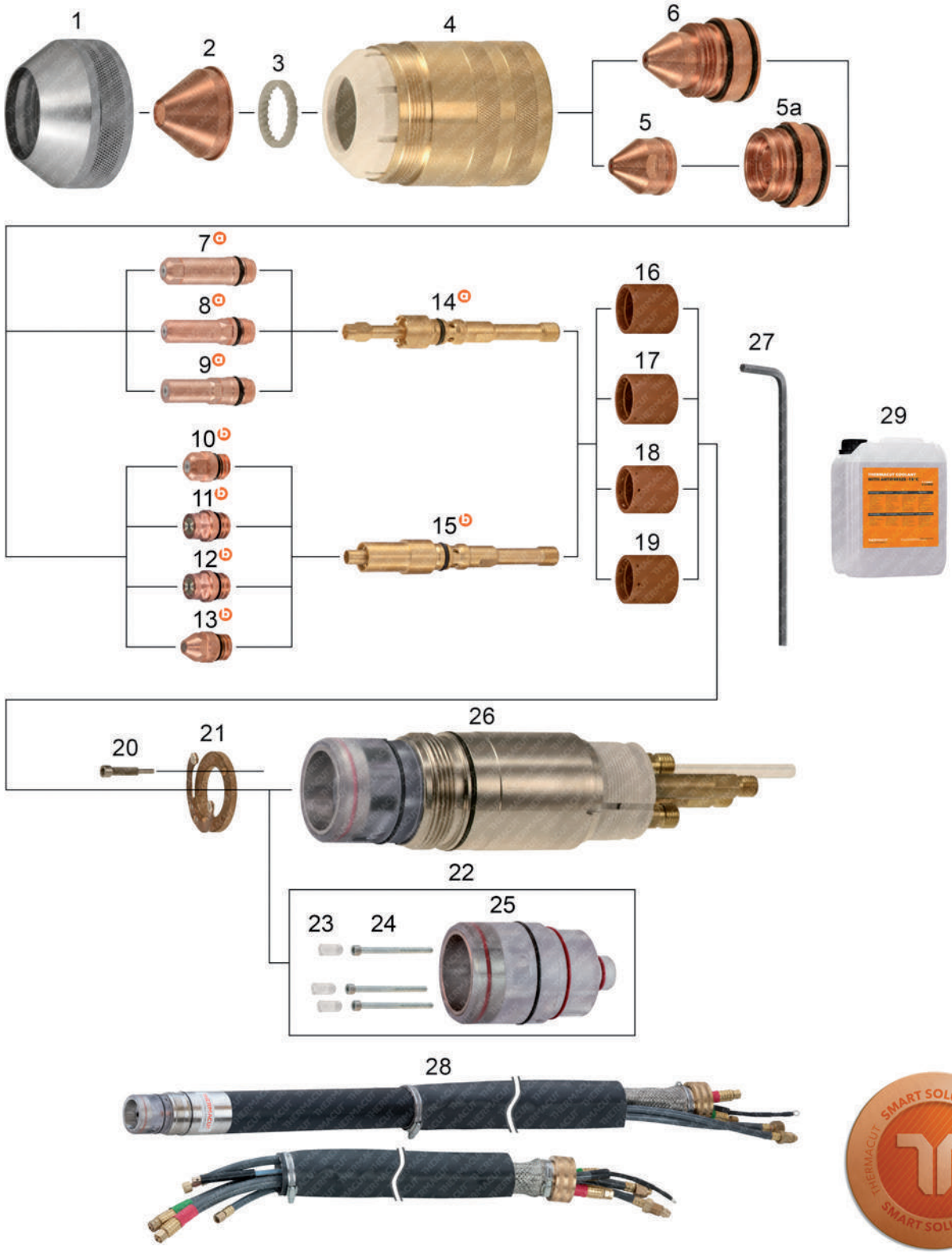

Last update of this page: 02/02/2018. See Revision history for details.

THERMACUT®, FHT-EX® AND EX-TRAFIRE® ARE REGISTERED TRADEMARKS OF THERMACUT, K.S. AND MAY BE REGISTERED IN CZECH REPUBLIC AND/OR OTHER COUNTRIES. ALL OTHER TRADEMARKS ARE PROPERTIES OF THEIR RESPECTIVE OWNERS. THERMACUT IS NO WAY AFFILIATED WITH ESAB®/L-TEC®.
MOST THERMACUT PARTS ARE MADE FOR OR BY AN IBG COMPANY. PARTS INDICATED WITH A OEM ARE ORIGINAL PARTS MANUFACTURED BY THE ABOVE NAMED MANUFACTURER AND ARE BEING RESOLD BY THERMACUT. THERMACUT RESERVES THE RIGHT TO SUBSTITUTE OEM PARTS IN PLACE OF THERMACUT PARTS.
VALID FROM FEBRUARY 2018 • PREVIOUS VERSION IS NO LONGER VALID. • © COPYRIGHT 2018 BY THERMACUT® CZECH REPUBLIC. ALL RIGHTS RESERVED.

REPLACEMENT PARTS SUITABLE FOR
ESAB®/L-TEC®

PT-600™

PRODUCT BROCHURE WITH DETAILS AT
WWW.THERMACUT.COM

Item	Part No.	Ref. No.	Description	Std. Pkg.
1.	T-10128	37081	Shield Retainer	1
2.	T-2266	21802	Shield 100–250A	1
	T-2267	21945	Shield 360A	1
	T-4580	21795 OEM	Shield 50A	5
NS	T-10124	0558004678	Precision Shield 110–200A	
3.	T-2269	21944	Diffuser 100–600A	1
	T-10331	22496	Diffuser 100–600A, CCW	1
NS	T-2268	21796	Gas Diffuser 50A	1
4.	T-10129	37082	Nozzle Retaining Cap	1
5.	T-1720	22026	Nozzle Tip 50A	5
	T-1717	22029	Nozzle Tip 100A	5
	T-1718	22030	Nozzle Tip 150A	5
	T-1719	22031	Nozzle Tip 200A	5
5a.	T-1721	22027	Nozzle Base 50A	1
	T-1722	22028	Nozzle Base 100–250A	1
6.	T-5331	0558001881	Nozzle 50A	1
	T-5332	0558001882	Nozzle 100A	1
	T-5333	0558001883	Nozzle 150A	1
	T-5334	0558001884	Nozzle 200A	1
	T-5330	0558001623	Nozzle 250A	1
	T-5335	0558001885	Nozzle 360A	1
	T-5336	0558001886	Nozzle 400A	1
	T-5337	0558001887	Nozzle 600A	1
a 7.	T-11239	0558001624-PRO a	Electrode 250A, Silver PRO	5
a 8.	T-11240	T-11240-PRO a	Electrode 260/400A, Silver PRO	5
a 9.	T-11238	0558002516-PRO a	Electrode 360/400A, Silver PRO	5
b 10.	T-11303	T-11303-PRO b	Electrode 50–250A, Silver PRO	5

Item	Part No.	Ref. No.	Description	Std. Pkg.
b 11.	T-11290* b	0558003914-PRO	Electrode 100–450A, O_2, Silver PRO	5
b 12.	T-11994 b	0558012000-PRO	Electrode 100–450A, O_2, Silver PRO	5
b 13.	T-11910 b	0558003928-UR	Electrode, N_2/H35	5
	T-10439	0558005459 OEM	Replaced by 0558003914-PRO	3
a 14.	T-11201 a	0558001621	Electrode Holder	1
b 15.	T-11210 b	T-11210	Electrode Holder	1
16.	T-4606	0558002533	Gas Swirl Baffle, 4 hole x 0,032, CW	1
17.	T-4607	0558002534	Gas Swirl Baffle, 4 hole x 0,032, CCW	1
18.	T-4636	0558001625	Gas Swirl Baffle, 8 hole x 0,047, CW	1
19.	T-11119	0558002530	Gas Swirl Baffle, 8 Hole x 0,047, CCW	1
20.	T-11942	37073	Screw	1
21.	T-11863	0558003858	Cont. Ring with 2pcs Screws 37073(=37071)	1
22.	T-12040	T-12040	Exchangeable insulator kit	1
23.	PT-13160	0558001825-11	Plastic screw	1
24.	PT-13159	0558001825-10	Screw	1
25.	PT-12123	0558001825-8	Insulator body	1
26.	T-10283	0558001825	Torch Body	1
NS	T-11202	T-11202	Electrode holder wrench	1
NS	KT-1178	996248	PT-600™ Hose, power, 1,8m	1
NS	KT-1176	34360	PT-600™ Hose, plas.,1,8m	1
NS	KT-1189	33209	PT-600™ Hose, power, 4,6m	1
NS	KT-1330	33211	PT-600™ Hose, power, 7,6m	1
NS	KT-1177	37357	PT-600™ Cable, pilot, 2m	1
27.	N-20426	93750010	Hex Key Wrench for Contact Ring	1
28.	Cable Leads are available on request, because of more possible types of fittings.			
29.	Coolant Liquid. Details on the page 144, section Accessories.			

a MUST BE USED ONLY AS A SET OF ELECTRODE HOLDER 0558001621 AND 0558001624-PRO, T-11240-PRO, 0558002516-PRO ELECTRODES.

b MUST BE USED ONLY AS A SET OF ELECTRODE HOLDER T-11210 AND T-11303-PRO, 0558003914-PRO, 0558012000-PRO, 0558003928-UR ELECTRODES.

* A UNIQUE DESIGN WHICH ENHANCES PERFORMANCE AND DIFFERS FROM OEM DESIGNS

CCW COUNTER CLOCK WISE GAS SWIRLING, USE OF CCW PARTS WILL MAKE CUT ANGLE ON THE OPPOSITE SIDE, THAN WITH STANDARD CLOCK WISE (CW) SWIRLING PARTS.

NS NOT SHOWN IN THE PICTURE

-PRO TECHNOLOGY OF SILVER INSERTED COPPER ELECTRODE BODY, WHICH SIGNIFICANTLY DECREASES ELECTRODE COSTS WITH SIMILAR WORK PERFORMANCE COMPARED TO FULL SILVER ELECTRODES.

SMART SOLUTION – DESIGN IMPROVEMENTS THAT BRINGS ADDED VALUE SUCH AS IMPROVED LIFETIME OF CONSUMABLES, EXCELLENT CUT QUALITY, SPEED OR BETTER COST EFFECTIVENESS OF YOUR SYSTEM

Last update of this page: 02/02/2018. See Revision history for details.

THERMACUT®
THE CUTTING COMPANY®

WWW.THERMACUT.CZ
TEL.: +420 556 423 418
SALES@THERMACUT.CZ

WWW.THERMACUT.DE
TEL.: +49 (0) 27 39 40 33 0
INFO@THERMACUT.DE

WWW.THERMACUT.COM
TEL.: 1-603-542-6715
CUSTOMERSERVICE@THERMACUT.COM

THERMACUT®, FHT-EX® AND EX-TRAFIRE® ARE REGISTERED TRADEMARKS OF THERMACUT, K.S. AND MAY BE REGISTERED IN CZECH REPUBLIC AND/OR OTHER COUNTRIES. ALL OTHER TRADEMARKS ARE PROPERTIES OF THEIR RESPECTIVE OWNERS. THERMACUT IS NO WAY AFFILIATED WITH ESAB®/L-TEC®.
MOST THERMACUT PARTS ARE MADE FOR OR BY AN IBG COMPANY. PARTS INDICATED WITH A OEM ARE ORIGINAL PARTS MANUFACTURED BY THE ABOVE NAMED MANUFACTURER AND ARE BEING RESOLD BY THERMACUT. THERMACUT RESERVES THE RIGHT TO SUBSTITUTE OEM PARTS IN PLACE OF THERMACUT PARTS.
VALID FROM FEBRUARY 2018 • PREVIOUS VERSION IS NO LONGER VALID. • © COPYRIGHT 2018 BY THERMACUT® CZECH REPUBLIC. ALL RIGHTS RESERVED.

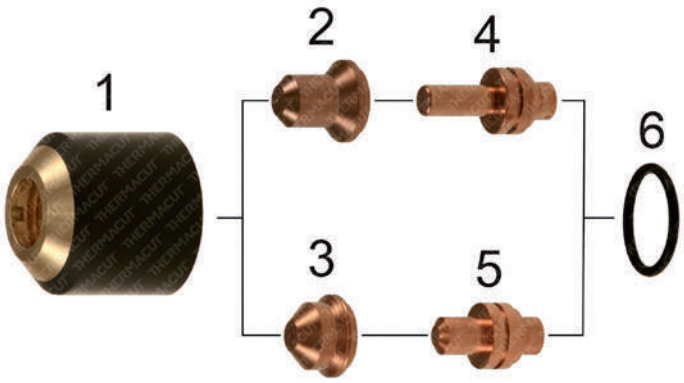

Item	Part No.	Ref. No.	Description	Std. Pkg.	Item	Part No.	Ref. No.	Description	Std. Pkg.
1.	T-0032	020218	Retaining Cap	1	4.	T-0037	020382	Electrode, Extended	10
2.	T-0034	020381	Nozzle, 20Amp, Extended	10	5.	T-0036	020220	Electrode	10
3.	T-0033	020299	Nozzle, 20Amp	10	6.	T-0038	044016	O-Ring	1

Last update of this page: 15/02/2018. See Revision history for details.

WWW.THERMACUT.CZ
TEL.: +420 556 423 418
SALES@THERMACUT.CZ
WWW.THERMACUT.DE
TEL.: +49 (0) 27 39 40 33 0
INFO@THERMACUT.DE
WWW.THERMACUT.COM
TEL.: 1-603-542-6715
CUSTOMERSERVICE@THERMACUT.COM

THERMACUT®, FHT-EX® AND EX-TRAFIRE® ARE REGISTERED TRADEMARKS OF THERMACUT, K.S. AND MAY BE REGISTERED IN CZECH REPUBLIC AND/OR OTHER COUNTRIES. ALL OTHER TRADEMARKS ARE PROPERTIES OF THEIR RESPECTIVE OWNERS. THERMACUT IS NO WAY AFFILIATED WITH Hypertherm®.
MOST THERMACUT PARTS ARE MADE FOR OR BY AN IBG COMPANY. PARTS INDICATED WITH A OEM ARE ORIGINAL PARTS MANUFACTURED BY THE ABOVE NAMED MANUFACTURER AND ARE BEING RESOLD BY THERMACUT. THERMACUT RESERVES THE RIGHT TO SUBSTITUTE OEM PARTS IN PLACE OF THERMACUT PARTS.
VALID FROM FEBRUARY 2018 • PREVIOUS VERSION IS NO LONGER VALID. • © COPYRIGHT 2018 BY THERMACUT® CZECH REPUBLIC. ALL RIGHTS RESERVED.

REPLACEMENT PARTS SUITABLE FOR
Hypertherm®
MAX®40cs/MAX®42/MAX®43
PAC®120/PAC®125T

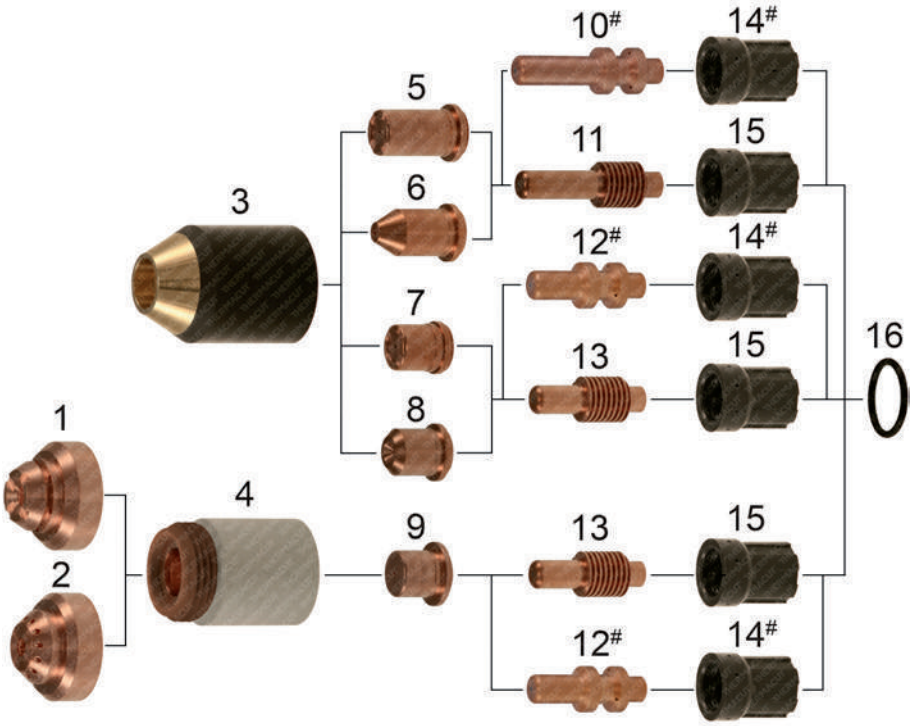

Item	Part No.	Ref. No.	Description	Std. Pkg.	Item	Part No.	Ref. No.	Description	Std. Pkg.
*1.	T-9824*	120601-UR	Shield, Hand	1	9.	T-3420	120438	Nozzle	10
*2.	T-9825*	120602-UR	Shield, Machine	1	#10.	T-4451 #	120574-UR	Electrode, Extended, Long Life	5
3.	T-9580	020930	Retaining Cap	1	11.	T-2298	120574	Electrode, Extended	5
4.	T-12045	120600	Retaining Cap	1	#12.	T-4450 #	120573-UR	Electrode, Long Life	5
5.	T-0089	020546	Nozzle, Extended	10	13.	T-3419	120573	Electrode	5
6.	T-0093	120023	Nozzle, Pipe Saddle	5	#14.	T-4452 #	020361-UR	Swirl Ring	2
	T-1799	020542	Nozzle	10	15.	T-0029	020361	Swirl Ring	2
7.	T-0027	020350	Nozzle, 40Amp	10	16.	T-0038	044016	O-Ring	1
	T-0028	020395	Nozzle	10	NS	KT-1405	128925	RT60M™ Cable Leads 15,2m (50') with CC	1
8.	T-0094	020539	Nozzle, Gouging	10	NS	KT-1406	083218-UR	RT60M™ Machine Torch with Leads 15,2m (50') with CC	1

* FULLY INTERCHANGEABLE AND COMPATIBLE WITH ORIGINAL PARTS, BUT DIFFERS FROM ORIGINAL DESIGN

\# MUST BE USED ONLY AS THE SET OF ELECTRODE & SWIRL RING LIKE SHOWN IN THE PICTURE (-UR DESIGN VERSION OR OEM VERSION), SET OFFERS LIFETIME LONGER UP TO 50%

NS NOT SHOWN IN THE PICTURE

SMART SOLUTION – DESIGN IMPROVEMENTS THAT BRINGS ADDED VALUE SUCH AS IMPROVED LIFETIME OF CONSUMABLES, EXCELLENT CUT QUALITY, SPEED OR BETTER COST EFFECTIVENESS OF YOUR SYSTEM

Last update of this page: 24/02/2017. See Revision history for details.

THERMACUT®
THE CUTTING COMPANY®

WWW.THERMACUT.CZ
TEL.: +420 556 423 418
SALES@THERMACUT.CZ

WWW.THERMACUT.DE
TEL.: +49 (0) 27 39 40 33 0
INFO@THERMACUT.DE

WWW.THERMACUT.COM
TEL.: 1-603-542-6715
CUSTOMERSERVICE@THERMACUT.COM

THERMACUT®, FHT-EX® AND EX-TRAFIRE® ARE REGISTERED TRADEMARKS OF THERMACUT, K.S. AND MAY BE REGISTERED IN CZECH REPUBLIC AND/OR OTHER COUNTRIES. ALL OTHER TRADEMARKS ARE PROPERTIES OF THEIR RESPECTIVE OWNERS. THERMACUT IS NO WAY AFFILIATED WITH Hypertherm®.
MOST THERMACUT PARTS ARE MADE FOR OR BY AN IBG COMPANY. PARTS INDICATED WITH A OEM ARE ORIGINAL PARTS MANUFACTURED BY THE ABOVE NAMED MANUFACTURER AND ARE BEING RESOLD BY THERMACUT. THERMACUT RESERVES THE RIGHT TO SUBSTITUTE OEM PARTS IN PLACE OF THERMACUT PARTS.
VALID FROM FEBRUARY 2018 • PREVIOUS VERSION IS NO LONGER VALID. • © COPYRIGHT 2018 BY THERMACUT® CZECH REPUBLIC. ALL RIGHTS RESERVED.

REPLACEMENT PARTS SUITABLE FOR
Hypertherm®
MAX®40
PAC®140/M

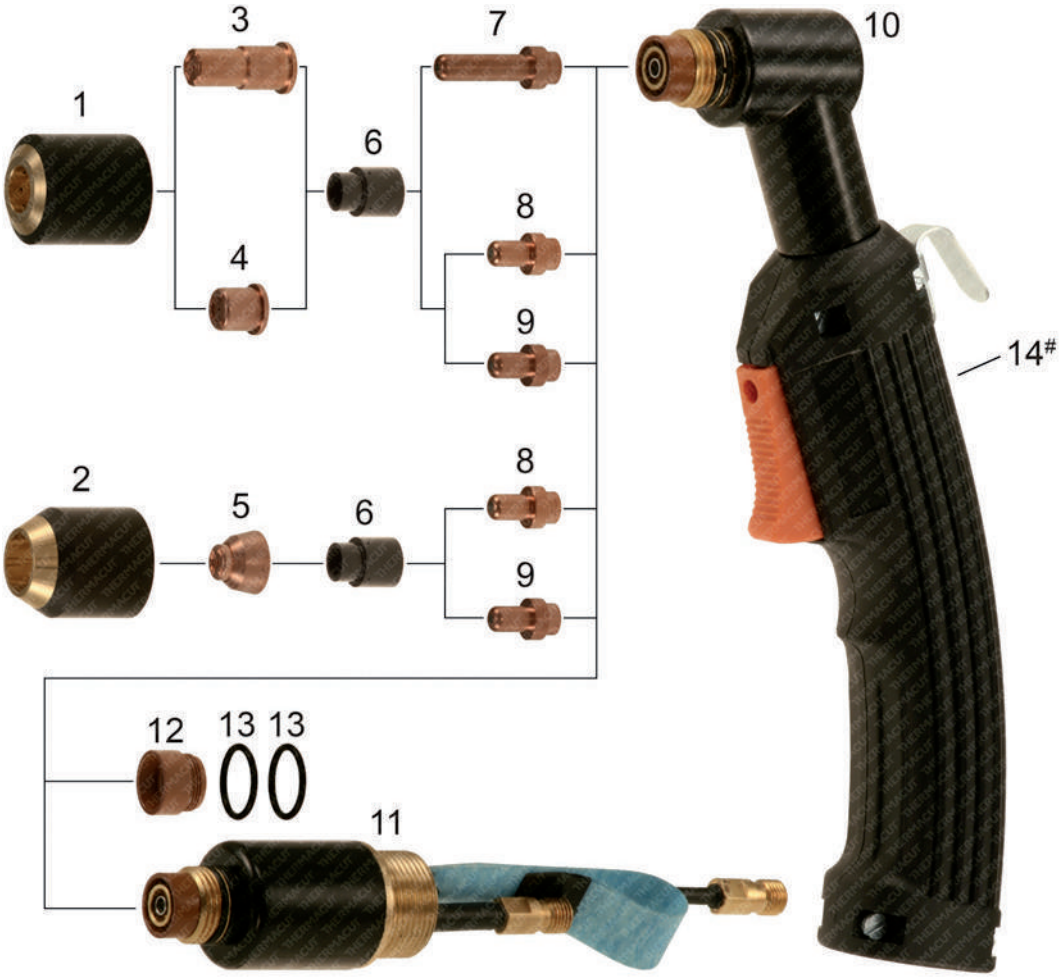

Item	Part No.	Ref. No.	Description	Std. Pkg.	Item	Part No.	Ref. No.	Description	Std. Pkg.
1.	T-0043	020104	Retaining Cap, Standard	1	9.	T-0052	020103	Electrode, Air	10
2.	T-0044	020200	Retaining Cap, Tapered	1	10.,14.	T-0055	020122	PAC®140 Hand Torch + Handle	1
3.	T-0050	020466	Nozzle, Extended	10	11.	T-0056	020114	PAC®140/M Machine Torch	1
4.	T-0045	020115	Nozzle 40A	10	12.	T-0095	020114-1	Front Insulator	1
	T-0046	020102	Nozzle 40A (HT®40)	10	13.	T-0038	044016	O-Ring	1
5.	T-0048	020197	Nozzle 40A, Tapered	10	#14.	T-1040#	9-5636-1	Handle	5
NS	T-0096	020340	Nozzle, Gouging	10	NS	KT-1229	K.PAC140H.5M	PAC®140/H Hand Torch with Lead 5m (16')	1
NS	T-0047	020131	Nozzle, Pipe Saddle (HT®40)	10	NS	KT-1210	057112	PAC®140/H Hand Torch with Lead 7,6m (25')	1
6.	T-0051	020101	Swirl Ring	2	NS	KT-1261	057113	PAC®140/H Hand Torch with Lead 15,2m (50')	1
7.	T-0054	020467	Electrode, Extended	5	NS	KT-1084	028290	PAC®140/M Cable Leads, Mach.15,2m (50')	1
8.	T-0053	020167	Electrode, N_2	10		Different types of cable leads available on request			

ONLY FOR THERMACUT TORCH DESIGN
NS NOT SHOWN IN THE PICTURE
MAX®40 AND HT®40 PARTS ARE FULLY INTERCHANGEABLE IN CASE OF NEED.

Last update of this page: 11/04/2016. See Revision history for details.

THERMACUT®, FHT-EX® AND EX-TRAFIRE® ARE REGISTERED TRADEMARKS OF THERMACUT, K.S. AND MAY BE REGISTERED IN CZECH REPUBLIC AND/OR OTHER COUNTRIES. ALL OTHER TRADEMARKS ARE PROPERTIES OF THEIR RESPECTIVE OWNERS. THERMACUT IS NO WAY AFFILIATED WITH Hypertherm®.
MOST THERMACUT PARTS ARE MADE FOR OR BY AN IBG COMPANY. PARTS INDICATED WITH A OEM ARE ORIGINAL PARTS MANUFACTURED BY THE ABOVE NAMED MANUFACTURER AND ARE BEING RESOLD BY THERMACUT. THERMACUT RESERVES THE RIGHT TO SUBSTITUTE OEM PARTS IN PLACE OF THERMACUT PARTS.
VALID FROM FEBRUARY 2018 • PREVIOUS VERSION IS NO LONGER VALID. • © COPYRIGHT 2018 BY THERMACUT® CZECH REPUBLIC. ALL RIGHTS RESERVED.

REPLACEMENT PARTS SUITABLE FOR
Hypertherm®
HT®40
PAC®140/M

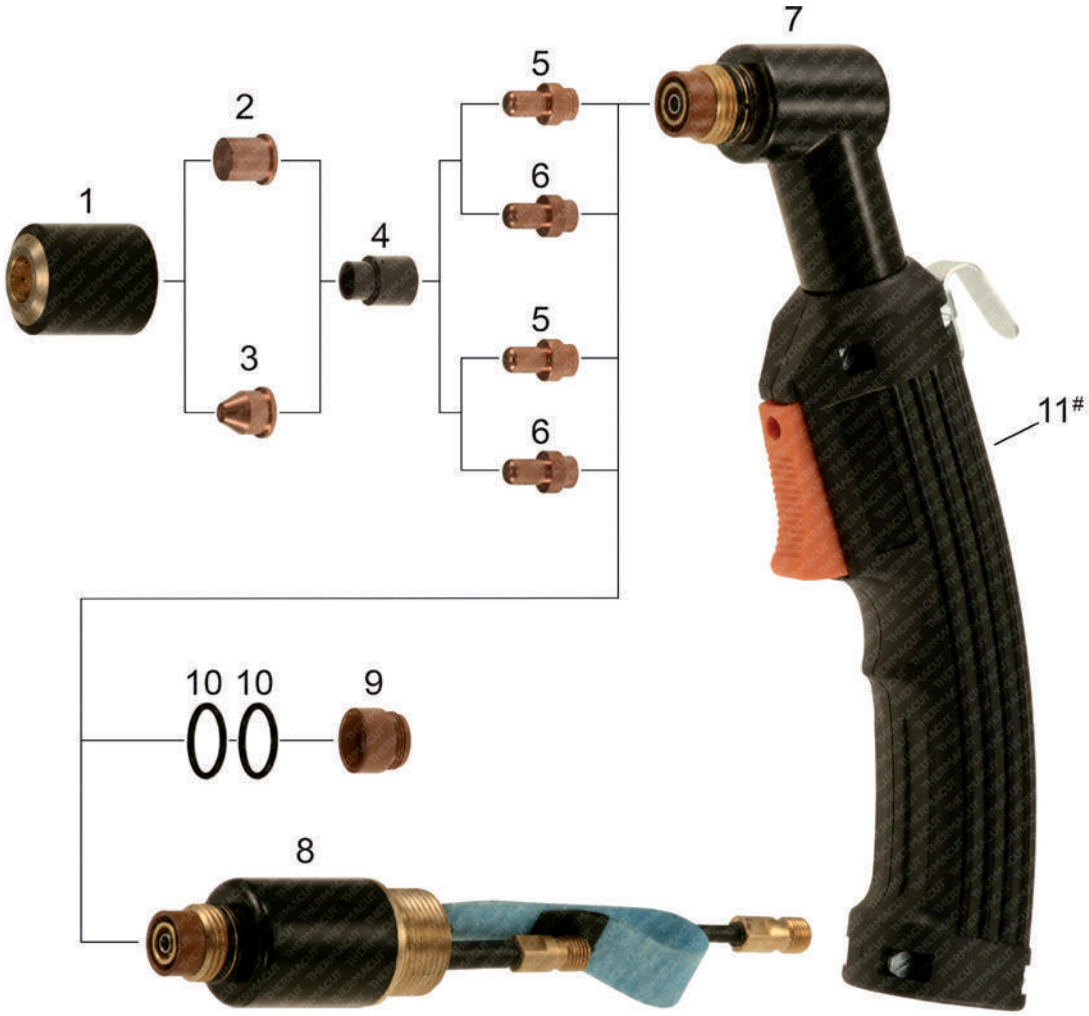

Item	Part No.	Ref. No.	Description	Std. Pkg.	Item	Part No.	Ref. No.	Description	Std. Pkg.
1.	T-0043	020104	Retaining Cap, Standard	1	9.	T-0095	020114-1	Front Insulator	1
2.	T-0046	020102	Nozzle 40A	1	10.	T-0038	044016	O-Ring	1
3.	T-0047	020131	Nozzle, Pipe Saddle	1	#11.	T-1040#	9-5636-1	Handle	1
4.	T-0051	020101	Swirl Ring	1	NS	KT-1229	K.PAC140H.5M	PAC®140/H Hand Torch with Lead 5m (16')	1
5.	T-0053	020167	Electrode, N_2	5	NS	KT-1210	057112	PAC®140/H Hand Torch with Lead 7,6m (25')	1
6.	T-0052	020103	Electrode, Air	5	NS	KT-1261	057113	PAC®140/H Hand Torch with Lead 15,2m (50')	1
7.,11.	T-0055	020122	PAC®140 Hand Torch + Handle	1	NS	KT-1084	028290	PAC®140/M Cable Leads, Mach.15,2m (50')	1
8.	T-0056	020114	PAC®140/M Machine Torch	1	Different types of cable leads available on request				

ONLY FOR THERMACUT TORCH DESIGN
NS NOT SHOWN IN THE PICTURE
MAX®40 AND HT®40 PARTS ARE FULLY INTERCHANGEABLE IN CASE OF NEED.

Last update of this page: 11/04/2014. See Revision history for details.

THERMACUT®
THE CUTTING COMPANY®

WWW.THERMACUT.CZ
TEL.: +420 556 423 418
SALES@THERMACUT.CZ

WWW.THERMACUT.DE
TEL.: +49 (0) 27 39 40 33 0
INFO@THERMACUT.DE

WWW.THERMACUT.COM
TEL.: 1-603-542-6715
CUSTOMERSERVICE@THERMACUT.COM

THERMACUT®, FHT-EX® AND EX-TRAFIRE® ARE REGISTERED TRADEMARKS OF THERMACUT, K.S. AND MAY BE REGISTERED IN CZECH REPUBLIC AND/OR OTHER COUNTRIES. ALL OTHER TRADEMARKS ARE PROPERTIES OF THEIR RESPECTIVE OWNERS. THERMACUT IS NO WAY AFFILIATED WITH Hypertherm®.
MOST THERMACUT PARTS ARE MADE FOR OR BY AN IBG COMPANY. PARTS INDICATED WITH A OEM ARE ORIGINAL PARTS MANUFACTURED BY THE ABOVE NAMED MANUFACTURER AND ARE BEING RESOLD BY THERMACUT. THERMACUT RESERVES THE RIGHT TO SUBSTITUTE OEM PARTS IN PLACE OF THERMACUT PARTS.
VALID FROM FEBRUARY 2018 • PREVIOUS VERSION IS NO LONGER VALID. • © COPYRIGHT 2018 BY THERMACUT® CZECH REPUBLIC. ALL RIGHTS RESERVED.

REPLACEMENT PARTS SUITABLE FOR
Hypertherm®
MAX®70/MAX®80/MAX®100
PAC®130/M

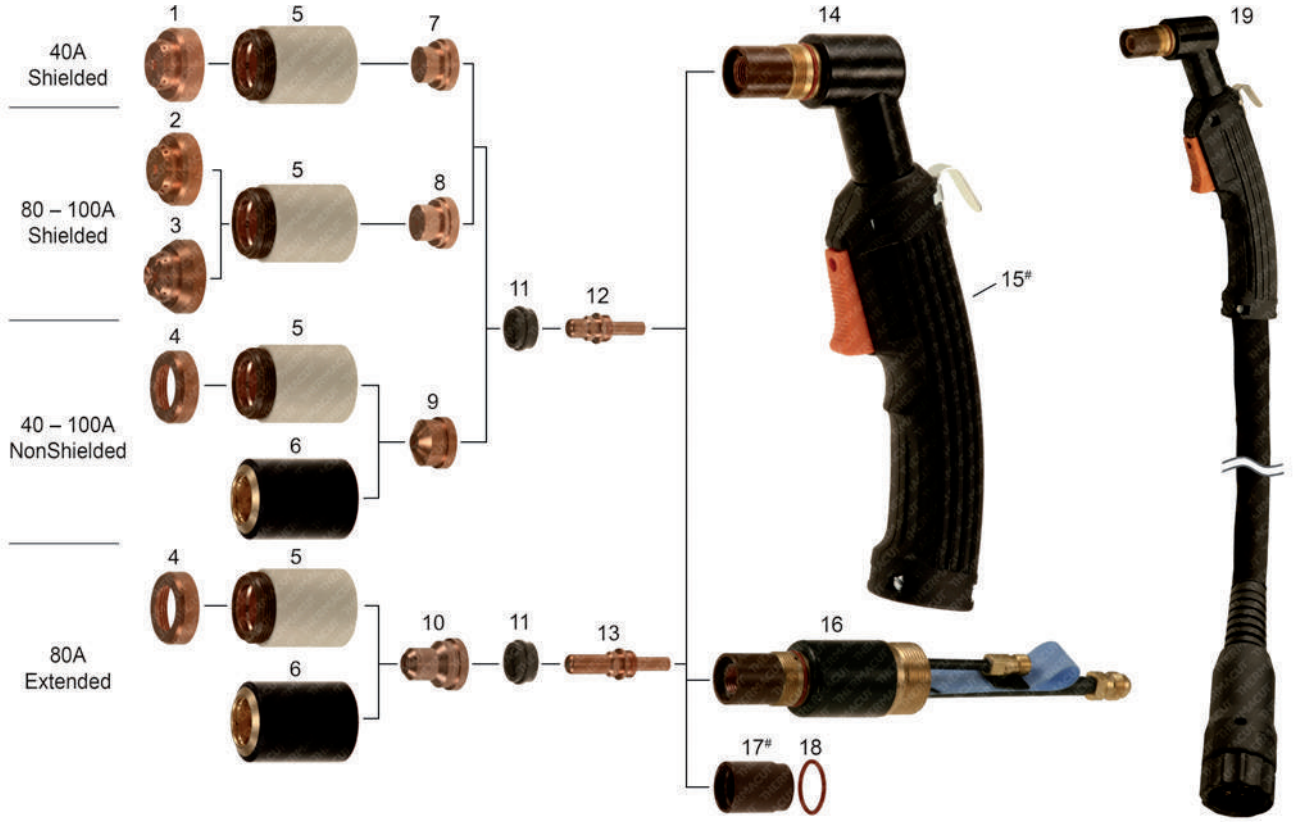

Item	Part No.	Ref. No.	Description	Std. Pkg.
1.	T-1041	020492	Shield Mach. 40A–MAX®100, 60A–MAX®100D	1
2.	T-0071	020334	Shield, Machine 100A	1
3.	T-0072	020335	Shield, Hand 100A	1
4.	T-0070	020333	Deflector	1
5.	T-4609	020336	Retaining Cap	1
6.	T-0058	020184	Retaining Cap	1
7.	T-0099	020396	Nozzle 40A, Shielded	5
8.	T-0062	020397	Nozzle 80A, Shielded	5
	T-0063	020337	Nozzle 100A, Shielded	5
9.	T-0059	020203	Nozzle 40A, NonShielded	5
	T-0060	020345	Nozzle 80A, NonShielded	5
	T-0061	020195	Nozzle 100A, NonShielded	5
10.	T-0100	020563	Nozzle 80A, Extended	5
NS	T-0064	020339	Nozzle 100A, Gouging	5
11.	T-0065	020194	Swirl Ring	2
12.	T-8128	120433	Electrode 80A, 100A	5

Item	Part No.	Ref. No.	Description	Std. Pkg.
	T-0066	020191	Electrode 80A, 100A	5
	T-0067	020193	Electrode 40A, 80A, 100A	5
13.	T-0098	020564	Electrode, Extended	5
14.,15.	T-0068	020189	PAC®130, Hand Torch + Handle	1
#15.	T-1040#	9-5636-1	Handle	5
16.	T-0069	020201	PAC®130/M, Machine Torch Main Body	1
#17.	T-0097#	020189-1	Insulator (only for TMT torch)	1
18.	T-0074	026018	O-Ring	1
NS	KT-1079	059076	PAC®130/H Hand Torch w/ Lead 7,6m (25')	1
NS	KT-1298	029198	PAC®130/H Cable Leads, Hand 7,6m (25')	1
19.	KT-1268	059093	PAC®130/H Hand Torch w/ Lead 7,6m (25') w/ CC	1
NS	KT-1451	059008	PAC®130/M Machine Torch w/ Leads 7,6m (25')	1
NS	KT-1071	028524	PAC®130/M Cable Leads, Mach. 7,6m (25') w/ CC	1
NS	KT-1077	K.PAC130M.18M.CK.K	PAC®130/M Cable Leads, Mach. 18m (59') w/ CC	1
Different types of cable leads available on request				

#	ONLY FOR THERMACUT TORCH DESIGN
NS	NOT SHOWN IN THE PICTURE
CC	CENTRAL CONNECTOR
W/	WITH

Last update of this page: 24/02/2017. See Revision history for details.

THERMACUT®
THE CUTTING COMPANY

WWW.THERMACUT.CZ
TEL.: +420 556 423 418
SALES@THERMACUT.CZ

WWW.THERMACUT.DE
TEL.: +49 (0) 27 39 40 33 0
INFO@THERMACUT.DE

WWW.THERMACUT.COM
TEL.: 1-603-542-6715
CUSTOMERSERVICE@THERMACUT.COM

THERMACUT®, FHT-EX® AND EX-TRAFIRE® ARE REGISTERED TRADEMARKS OF THERMACUT, K.S. AND MAY BE REGISTERED IN CZECH REPUBLIC AND/OR OTHER COUNTRIES. ALL OTHER TRADEMARKS ARE PROPERTIES OF THEIR RESPECTIVE OWNERS. THERMACUT IS NO WAY AFFILIATED WITH Hypertherm®.
MOST THERMACUT PARTS ARE MADE FOR OR BY AN IBG COMPANY. PARTS INDICATED WITH A OEM ARE ORIGINAL PARTS MANUFACTURED BY THE ABOVE NAMED MANUFACTURER AND ARE BEING RESOLD BY THERMACUT. THERMACUT RESERVES THE RIGHT TO SUBSTITUTE OEM PARTS IN PLACE OF THERMACUT PARTS.
VALID FROM FEBRUARY 2018 • PREVIOUS VERSION IS NO LONGER VALID. • © COPYRIGHT 2018 BY THERMACUT® CZECH REPUBLIC. ALL RIGHTS RESERVED.

Hypertherm®

POWERMAX® 350
PAC®110

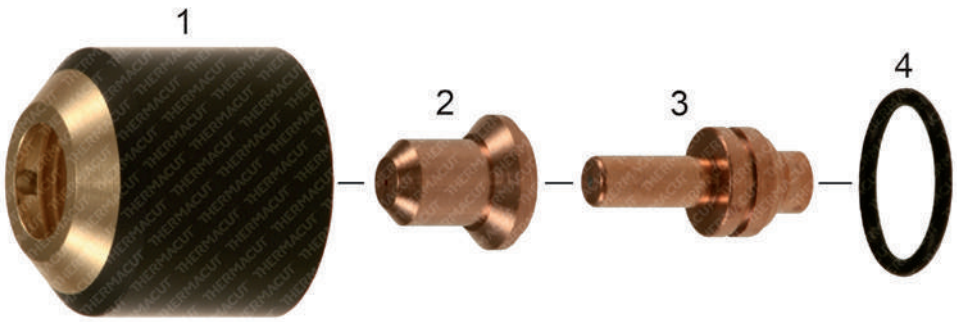

Item	Part No.	Ref. No.	Description	Std. Pkg.	Item	Part No.	Ref. No.	Description	Std. Pkg.
1.	T-0032	020218	Retaining Cap	1	3.	T-0037	020382	Electrode, Extended	10
2.	T-1860	120504	Nozzle, Extended, 25A	10	4.	T-0038	044016	O-Ring	1

Last update of this page: 15/02/2018. See Revision history for details.

WWW.THERMACUT.CZ
TEL.: +420 556 423 418
SALES@THERMACUT.CZ

WWW.THERMACUT.DE
TEL.: +49 (0) 27 39 40 33 0
INFO@THERMACUT.DE

WWW.THERMACUT.COM
TEL.: 1-603-542-6715
CUSTOMERSERVICE@THERMACUT.COM

THERMACUT®, FHT-EX® AND EX-TRAFIRE® ARE REGISTERED TRADEMARKS OF THERMACUT, K.S. AND MAY BE REGISTERED IN CZECH REPUBLIC AND/OR OTHER COUNTRIES. ALL OTHER TRADEMARKS ARE PROPERTIES OF THEIR RESPECTIVE OWNERS. THERMACUT IS NO WAY AFFILIATED WITH Hypertherm®.
MOST THERMACUT PARTS ARE MADE FOR OR BY AN IBG COMPANY. PARTS INDICATED WITH A OEM ARE ORIGINAL PARTS MANUFACTURED BY THE ABOVE NAMED MANUFACTURER AND ARE BEING RESOLD BY THERMACUT. THERMACUT RESERVES THE RIGHT TO SUBSTITUTE OEM PARTS IN PLACE OF THERMACUT PARTS.
VALID FROM FEBRUARY 2018 • PREVIOUS VERSION IS NO LONGER VALID. • © COPYRIGHT 2018 BY THERMACUT® CZECH REPUBLIC. ALL RIGHTS RESERVED.

Hypertherm®

POWERMAX® 600
PAC®123T/M

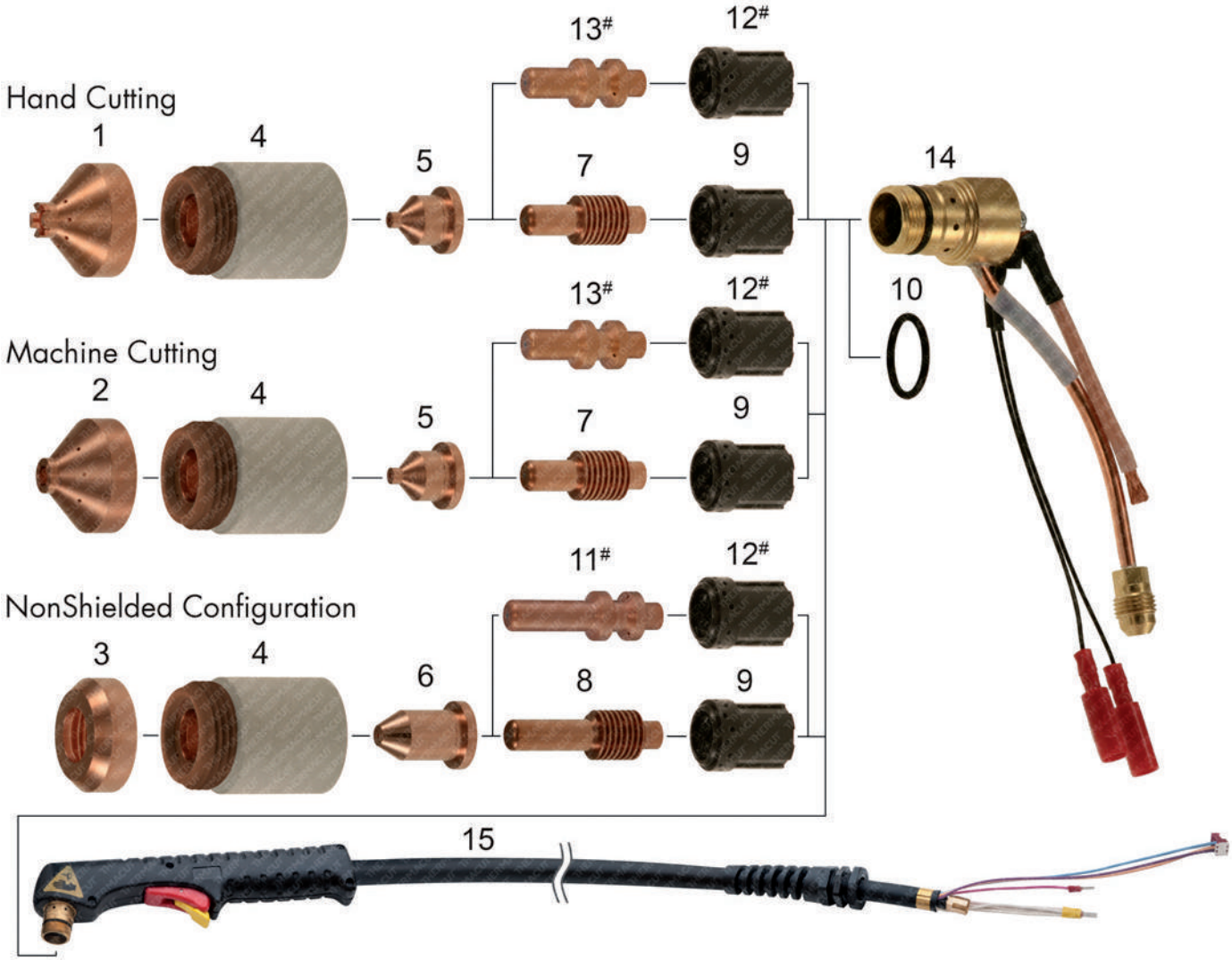

Last update of this page: 18/11/2016. See Revision history for details.

THERMACUT®
THE CUTTING COMPANY

WWW.THERMACUT.CZ
TEL.: +420 556 423 418
SALES@THERMACUT.CZ

WWW.THERMACUT.DE
TEL.: +49 (0) 27 39 40 33 0
INFO@THERMACUT.DE

WWW.THERMACUT.COM
TEL.: 1-603-542-6715
CUSTOMERSERVICE@THERMACUT.COM

THERMACUT®, FHT-EX® AND EX-TRAFIRE® ARE REGISTERED TRADEMARKS OF THERMACUT, K.S. AND MAY BE REGISTERED IN CZECH REPUBLIC AND/OR OTHER COUNTRIES. ALL OTHER TRADEMARKS ARE PROPERTIES OF THEIR RESPECTIVE OWNERS. THERMACUT IS NO WAY AFFILIATED WITH Hypertherm®.
MOST THERMACUT PARTS ARE MADE FOR OR BY AN IBG COMPANY. PARTS INDICATED WITH A OEM ARE ORIGINAL PARTS MANUFACTURED BY THE ABOVE NAMED MANUFACTURER AND ARE BEING RESOLD BY THERMACUT. THERMACUT RESERVES THE RIGHT TO SUBSTITUTE OEM PARTS IN PLACE OF THERMACUT PARTS.
VALID FROM FEBRUARY 2018 • PREVIOUS VERSION IS NO LONGER VALID. • © COPYRIGHT 2018 BY THERMACUT® CZECH REPUBLIC. ALL RIGHTS RESERVED.

REPLACEMENT PARTS SUITABLE FOR
Hypertherm®
POWERMAX® 600
PAC®123T/M

Item	Part No.	Ref. No.	Description	Std. Pkg.	Item	Part No.	Ref. No.	Description	Std. Pkg.
*1.	T-9827*	120828-UR	Shield 40A, Hand	1	10.	T-0038	044016	O-Ring	1
*2.	T-10727*	120827-UR	Shield 40A, Machine	1	#11.	T-4451#	120574-UR	Electrode, Extended, Long Life	5
3.	T-1564	120303	Deflector	1	#12.	T-4453#	120576-UR	Swirl Ring, Long Life	2
4.	T-12045	120600	Retaining Cap	1	#13.	T-4450#	120573-UR	Electrode, Long Life	5
5.	T-2847	120826	Nozzle 40A	5	14.	T-10269	120570	Torch Main Body with Safety Switch	1
6.	T-3418	120606	Nozzle 35A, Extended	10	NS	KT-1334	129476	PAC®123T Cable Leads, Hand 7,6m (25')	1
7.	T-3419	120573	Electrode	5	15.	KT-1333	086002	PAC®123T Hand Torch with Lead 7,6m (25')	1
8.	T-2298	120574	Electrode, Extended	5	NS	KT-1448	086024	PAC®123T H. Torch with Lead 7,6m (25'), Centr.Conn.	1
9.	T-2230	120576	Swirl Ring	2		Different types of cable leads available on request			

* FULLY INTERCHANGEABLE AND COMPATIBLE WITH ORIGINAL PARTS, BUT DIFFERS FROM ORIGINAL DESIGN

\# MUST BE USED ONLY AS THE SET OF ELECTRODE & SWIRL RING LIKE SHOWN IN THE PICTURE (-UR DESIGN VERSION OR OEM VERSION), SET OFFERS LIFETIME LONGER UP TO 50%

NS NOT SHOWN IN THE PICTURE

SMART SOLUTION – DESIGN IMPROVEMENTS THAT BRINGS ADDED VALUE SUCH AS IMPROVED LIFETIME OF CONSUMABLES, EXCELLENT CUT QUALITY, SPEED OR BETTER COST EFFECTIVENESS OF YOUR SYSTEM

Last update of this page: 18/11/2016. See Revision history for details.

THERMACUT®
THE CUTTING COMPANY®

WWW.THERMACUT.CZ
TEL.: +420 556 423 418
SALES@THERMACUT.CZ

WWW.THERMACUT.DE
TEL.: +49 (0) 27 39 40 33 0
INFO@THERMACUT.DE

WWW.THERMACUT.COM
TEL.: 1-603-542-6715
CUSTOMERSERVICE@THERMACUT.COM

THERMACUT®, FHT-EX® AND EX-TRAFIRE® ARE REGISTERED TRADEMARKS OF THERMACUT, K.S. AND MAY BE REGISTERED IN CZECH REPUBLIC AND/OR OTHER COUNTRIES. ALL OTHER TRADEMARKS ARE PROPERTIES OF THEIR RESPECTIVE OWNERS. THERMACUT IS NO WAY AFFILIATED WITH Hypertherm®.
MOST THERMACUT PARTS ARE MADE FOR OR BY AN IBG COMPANY. PARTS INDICATED WITH A OEM ARE ORIGINAL PARTS MANUFACTURED BY THE ABOVE NAMED MANUFACTURER AND ARE BEING RESOLD BY THERMACUT. THERMACUT RESERVES THE RIGHT TO SUBSTITUTE OEM PARTS IN PLACE OF THERMACUT PARTS.
VALID FROM FEBRUARY 2018 • PREVIOUS VERSION IS NO LONGER VALID. • © COPYRIGHT 2018 BY THERMACUT® CZECH REPUBLIC. ALL RIGHTS RESERVED.

Hypertherm®

POWERMAX® 800
PAC®121T/M/125T/M

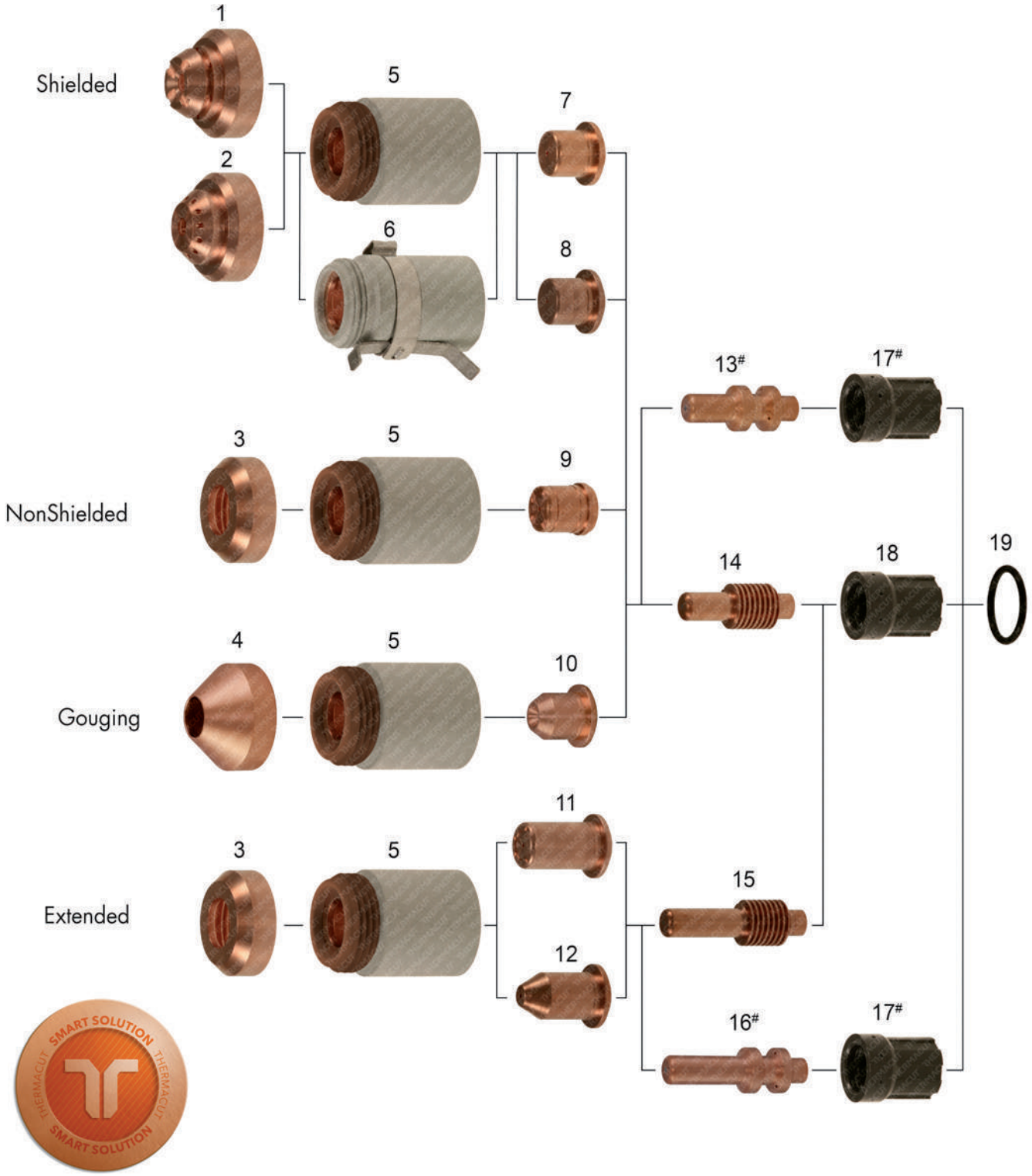

Last update of this page: 14/07/2017. See Revision history for details.

THERMACUT®
THE CUTTING COMPANY

WWW.THERMACUT.CZ
TEL.: +420 556 423 418
SALES@THERMACUT.CZ

WWW.THERMACUT.DE
TEL.: +49 (0) 27 39 40 33 0
INFO@THERMACUT.DE

WWW.THERMACUT.COM
TEL.: 1-603-542-6715
CUSTOMERSERVICE@THERMACUT.COM

THERMACUT®, FHT-EX® AND EX-TRAFIRE® ARE REGISTERED TRADEMARKS OF THERMACUT, K.S. AND MAY BE REGISTERED IN CZECH REPUBLIC AND/OR OTHER COUNTRIES. ALL OTHER TRADEMARKS ARE PROPERTIES OF THEIR RESPECTIVE OWNERS. THERMACUT IS NO WAY AFFILIATED WITH Hypertherm®.
MOST THERMACUT PARTS ARE MADE FOR OR BY AN IBG COMPANY. PARTS INDICATED WITH A OEM ARE ORIGINAL PARTS MANUFACTURED BY THE ABOVE NAMED MANUFACTURER AND ARE BEING RESOLD BY THERMACUT. THERMACUT RESERVES THE RIGHT TO SUBSTITUTE OEM PARTS IN PLACE OF THERMACUT PARTS.
VALID FROM FEBRUARY 2018 • PREVIOUS VERSION IS NO LONGER VALID. • © COPYRIGHT 2018 BY THERMACUT® CZECH REPUBLIC. ALL RIGHTS RESERVED.

REPLACEMENT PARTS SUITABLE FOR
Hypertherm®
POWERMAX® 800
PAC®121T/M/125T/M

Item	Part No.	Ref. No.	Description	Std. Pkg.	Item	Part No.	Ref. No.	Description	Std. Pkg.
*1.	T-9824*	120601-UR	Shield, Hand	1	#13.	T-4450#	120573-UR	Electrode, Long Life	5
*2.	T-9825*	120602-UR	Shield, Machine	1	14.	T-3419	120573	Electrode	5
3.	T-1564	120303	Deflector	1	15.	T-2298	120574	Electrode, Extended	5
4.	T-3412	120608	Shield, Gouging	1	#16.	T-4451#	120574-UR	Electrode, Extended, Long Life	5
5.	T-12045	120600	Retaining Cap	1	#17.	T-4452#	020361-UR	Swirl Ring, Long Life	2
*6.	T-10254*	120964-UR	Retaining Cap, Ohmic	1	18.	T-0029	020361	Swirl Ring	2
7.	T-1567	120282	Nozzle, 50A, Shielded	5	19.	T-0038	044016	O-Ring	1
8.	T-3420	120438	Nozzle, 40A, Shielded	10	NS	KT-1297	129352	PAC®125T Cable Leads 7,6m (25') with CC	1
9.	T-0028	020395	Nozzle, NonShielded	10	NS	KT-1374	083066	PAC®125T Hand Torch with Lead 7,6m (25') with CC	1
10.	T-1568	120281	Nozzle, Gouging	1	NS	KT-1501	083067	PAC®125T Hand Torch with Lead 15,2m (50') with CC	1
11.	T-1569	120304	Nozzle, Extended	5	NS	KT-1399	128922	RT60™ Cable Leads 7,6m (25') with CC	1
12.	T-1570	120305	Nozzle, Pipe Saddle, Extended	5	NS	KT-1398	083215-UR	RT60™ Hand Torch with Lead 7,6m (25') with CC	1
NS	T-9999	220330	Nozzle (PAC®123, FineCut®)	5	Different types of cable leads available on request				

* FULLY INTERCHANGEABLE AND COMPATIBLE WITH ORIGINAL PARTS, BUT DIFFERS FROM ORIGINAL DESIGN

\# MUST BE USED ONLY AS THE SET OF ELECTRODE & SWIRL RING, LIKE SHOWN IN THE PICTURE (UR DESIGN VERSION OR OEM DESIGN VERSION) SET OFFERS LIFETIME LONGER UP TO 50%

NS NOT SHOWN IN THE PICTURE

CC CENTRAL CONNECTOR

SMART SOLUTION – DESIGN IMPROVEMENTS THAT BRINGS ADDED VALUE SUCH AS IMPROVED LIFETIME OF CONSUMABLES, EXCELLENT CUT QUALITY, SPEED OR BETTER COST EFFECTIVENESS OF YOUR SYSTEM

Last update of this page: 14/07/2017. See Revision history for details.

WWW.THERMACUT.CZ
TEL.: +420 556 423 418
SALES@THERMACUT.CZ

WWW.THERMACUT.DE
TEL.: +49 (0) 27 39 40 33 0
INFO@THERMACUT.DE

WWW.THERMACUT.COM
TEL.: 1-603-542-6715
CUSTOMERSERVICE@THERMACUT.COM

THERMACUT®, FHT-EX® AND EX-TRAFIRE® ARE REGISTERED TRADEMARKS OF THERMACUT, K.S. AND MAY BE REGISTERED IN CZECH REPUBLIC AND/OR OTHER COUNTRIES. ALL OTHER TRADEMARKS ARE PROPERTIES OF THEIR RESPECTIVE OWNERS. THERMACUT IS NO WAY AFFILIATED WITH Hypertherm®.
MOST THERMACUT PARTS ARE MADE FOR OR BY AN IBG COMPANY. PARTS INDICATED WITH A OEM ARE ORIGINAL PARTS MANUFACTURED BY THE ABOVE NAMED MANUFACTURER AND ARE BEING RESOLD BY THERMACUT. THERMACUT RESERVES THE RIGHT TO SUBSTITUTE OEM PARTS IN PLACE OF THERMACUT PARTS.
VALID FROM FEBRUARY 2018 • PREVIOUS VERSION IS NO LONGER VALID. • © COPYRIGHT 2018 BY THERMACUT® CZECH REPUBLIC. ALL RIGHTS RESERVED.

Hypertherm®

POWERMAX® 900
PAC®125T/M

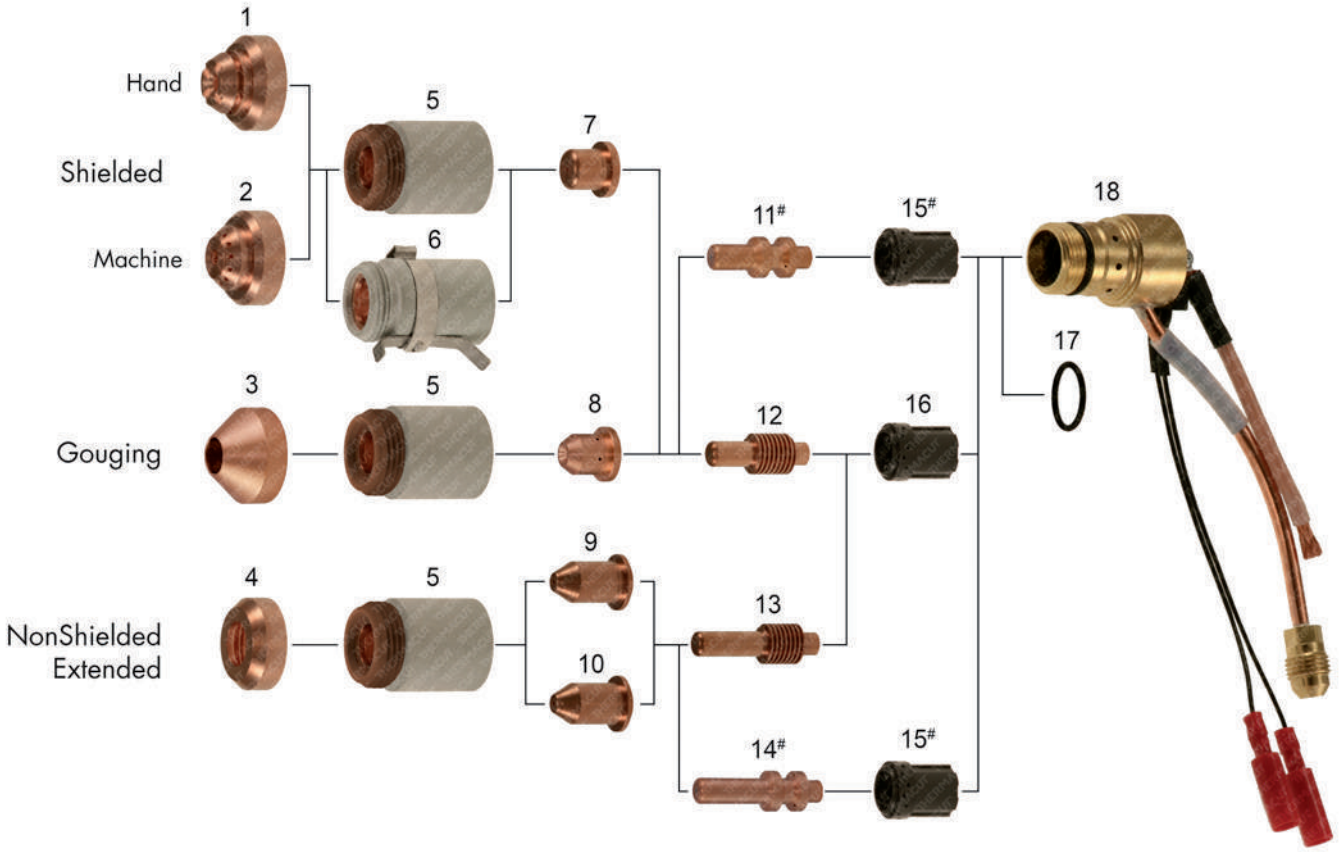

Last update of this page: 14/07/2017. See Revision history for details.

THERMACUT®
THE CUTTING COMPANY

WWW.THERMACUT.CZ
TEL.: +420 556 423 418
SALES@THERMACUT.CZ

WWW.THERMACUT.DE
TEL.: +49 (0) 27 39 40 33 0
INFO@THERMACUT.DE

WWW.THERMACUT.COM
TEL.: 1-603-542-6715
CUSTOMERSERVICE@THERMACUT.COM

THERMACUT®, FHT-EX® AND EX-TRAFIRE® ARE REGISTERED TRADEMARKS OF THERMACUT, K.S. AND MAY BE REGISTERED IN CZECH REPUBLIC AND/OR OTHER COUNTRIES. ALL OTHER TRADEMARKS ARE PROPERTIES OF THEIR RESPECTIVE OWNERS. THERMACUT IS NO WAY AFFILIATED WITH Hypertherm®.
MOST THERMACUT PARTS ARE MADE FOR OR BY AN IBG COMPANY. PARTS INDICATED WITH A OEM ARE ORIGINAL PARTS MANUFACTURED BY THE ABOVE NAMED MANUFACTURER AND ARE BEING RESOLD BY THERMACUT. THERMACUT RESERVES THE RIGHT TO SUBSTITUTE OEM PARTS IN PLACE OF THERMACUT PARTS.
VALID FROM FEBRUARY 2018 • PREVIOUS VERSION IS NO LONGER VALID. • © COPYRIGHT 2018 BY THERMACUT® CZECH REPUBLIC. ALL RIGHTS RESERVED.

REPLACEMENT PARTS SUITABLE FOR
Hypertherm®
POWERMAX® 900
PAC®125T/M

Item	Part No.	Ref. No.	Description	Std. Pkg.
*1.	T-9824*	120601-UR	Shield, Hand	1
*2.	T-9825*	120602-UR	Shield, Machine	1
3.	T-3412	120608	Shield, Gouging	1
4.	T-1564	120303	Deflector	1
5.	T-12045	120600	Retaining Cap	1
*6.	T-10254*	120964-UR	Retaining Cap, Ohmic	1
7.	T-3414	120577	Nozzle 55A, Shielded	5
8.	T-3415	120607	Nozzle, Gouging	10
9.	T-3417	120578	Nozzle, Extended 55A	10
10.	T-3418	120606	Nozzle, Extended 35A	10
NS	T-9999	220330	Nozzle (PAC®123, FineCut®)	5
#11.	T-4450#	120573-UR	Electrode, Long Life	5
12.	T-3419	120573	Electrode	5

Item	Part No.	Ref. No.	Description	Std. Pkg.
13.	T-2298	120574	Electrode, Extended	5
#14.	T-4451#	120574-UR	Electrode, Extended, Long Life	5
#15.	T-4453#	120576-UR	Swirl Ring, Long Life	2
16.	T-2230	120576	Swirl Ring	2
17.	T-0038	044016	O-Ring	1
18.	T-10269	120570	Torch Main Body with Safety Switch	1
NS	KT-1297	129352	PAC®125T Cable Leads 7,6m (25') with CC	1
NS	KT-1374	083066	PAC®125T Hand Torch with Lead 7,6m (25') with CC	1
NS	KT-1501	083067	PAC®125T Hand Torch with Lead 15,2m (50') with CC	1
NS	KT-1399	128922	RT60™ Cable Leads 7,6m (25') with CC	1
NS	KT-1398	083215-UR	RT60™ Hand Torch with Lead 7,6m (25') with CC	1
Different types of cable leads available on request.				

* FULLY INTERCHANGEABLE WITH ORIGINAL PARTS, BUT DIFFERS FROM ORIGINAL DESIGN

\# MUST BE USED ONLY AS THE SET OF ELECTRODE & SWIRL RING, LIKE SHOWN IN THE PICTURE (UR DESIGN VERSION OR OEM DESIGN VERSION), SET OFFERS LIFETIME LONGER UP TO 50%

NS NOT SHOWN IN THE PICTURE

CC CENTRAL CONNECTOR

Last update of this page: 14/07/2017. See Revision history for details.

THERMACUT®, FHT-EX® AND EX-TRAFIRE® ARE REGISTERED TRADEMARKS OF THERMACUT, K.S. AND MAY BE REGISTERED IN CZECH REPUBLIC AND/OR OTHER COUNTRIES. ALL OTHER TRADEMARKS ARE PROPERTIES OF THEIR RESPECTIVE OWNERS. THERMACUT IS NO WAY AFFILIATED WITH Hypertherm®.
MOST THERMACUT PARTS ARE MADE FOR OR BY AN IBG COMPANY. PARTS INDICATED WITH A OEM ARE ORIGINAL PARTS MANUFACTURED BY THE ABOVE NAMED MANUFACTURER AND ARE BEING RESOLD BY THERMACUT. THERMACUT RESERVES THE RIGHT TO SUBSTITUTE OEM PARTS IN PLACE OF THERMACUT PARTS.
VALID FROM FEBRUARY 2018 • PREVIOUS VERSION IS NO LONGER VALID. • © COPYRIGHT 2018 BY THERMACUT® CZECH REPUBLIC. ALL RIGHTS RESERVED.

REPLACEMENT PARTS SUITABLE FOR
Hypertherm®

POWERMAX® 1000 / POWERMAX® 1250 / POWERMAX® 1650
T60™/T60M™, T80™/T80M™, T100™/T100M™/T100M-2™

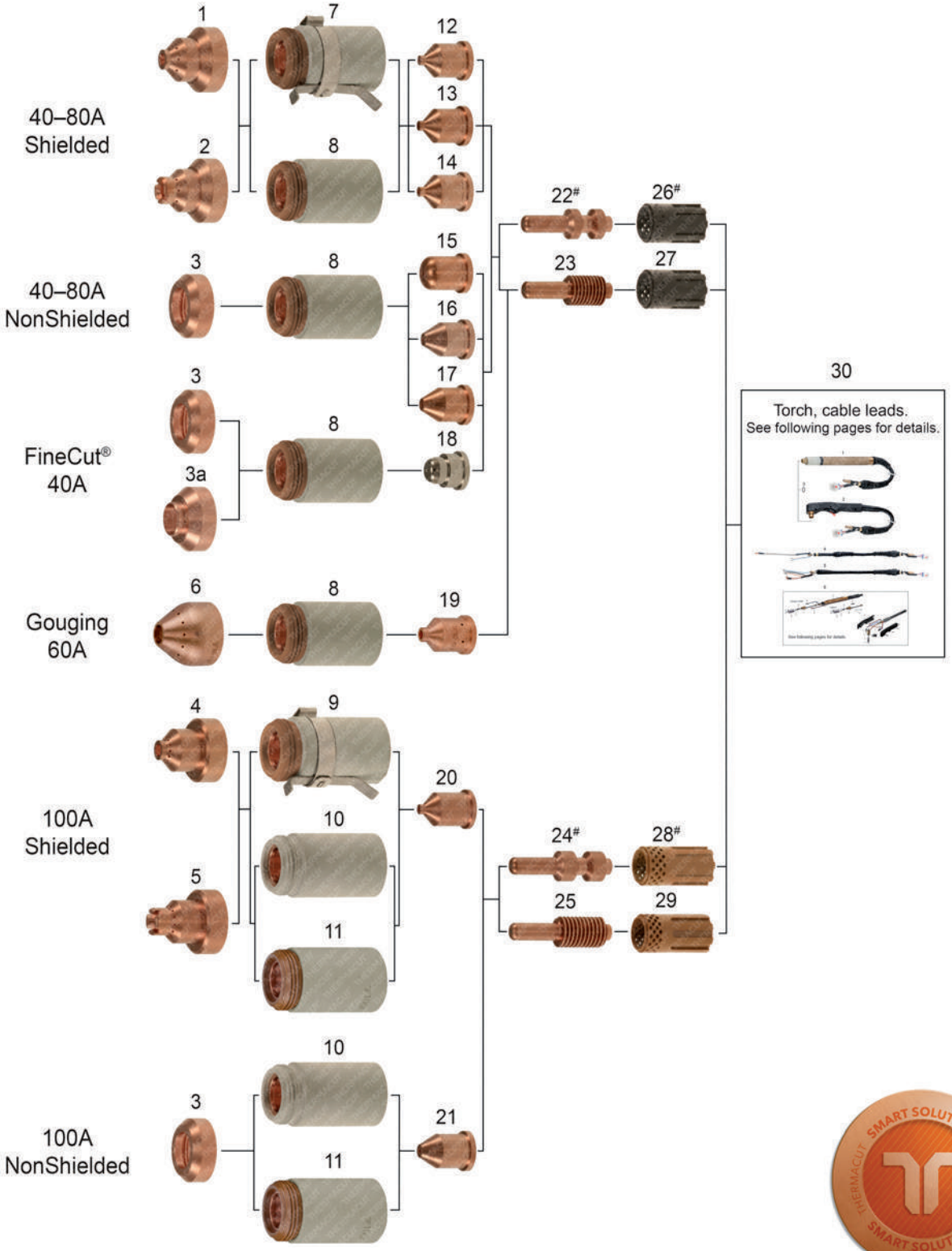

Last update of this page: 18/11/2016. See Revision history for details.

THERMACUT®
THE CUTTING COMPANY

WWW.THERMACUT.CZ
TEL.: +420 556 423 418
SALES@THERMACUT.CZ

WWW.THERMACUT.DE
TEL.: +49 (0) 27 39 40 33 0
INFO@THERMACUT.DE

WWW.THERMACUT.COM
TEL.: 1-603-542-6715
CUSTOMERSERVICE@THERMACUT.COM

THERMACUT®, FHT-EX® AND EX-TRAFIRE® ARE REGISTERED TRADEMARKS OF THERMACUT, K.S. AND MAY BE REGISTERED IN CZECH REPUBLIC AND/OR OTHER COUNTRIES. ALL OTHER TRADEMARKS ARE PROPERTIES OF THEIR RESPECTIVE OWNERS. THERMACUT IS NO WAY AFFILIATED WITH Hypertherm®.
MOST THERMACUT PARTS ARE MADE FOR OR BY AN IBG COMPANY. PARTS INDICATED WITH A OEM ARE ORIGINAL PARTS MANUFACTURED BY THE ABOVE NAMED MANUFACTURER AND ARE BEING RESOLD BY THERMACUT. THERMACUT RESERVES THE RIGHT TO SUBSTITUTE OEM PARTS IN PLACE OF THERMACUT PARTS.
VALID FROM FEBRUARY 2018 • PREVIOUS VERSION IS NO LONGER VALID. • © COPYRIGHT 2018 BY THERMACUT® CZECH REPUBLIC. ALL RIGHTS RESERVED.

REPLACEMENT PARTS SUITABLE FOR
Hypertherm®

POWERMAX® 1000 / POWERMAX® 1250 / POWERMAX® 1650
T60™/T60M™, T80™/T80M™, T100™/T100M™/T100M-2™

Item	Part No.	Ref. No.	Description	Std. Pkg	Item	Part No.	Ref. No.	Description	Std. Pkg.
*1.	T-9831*	120930-UR	Shield, Machine 40A/60A/80A	1	16.	T-4572	220007	Nozzle 60A Extended	5
*2.	T-9830*	120929-UR	Shield, Hand 40A/60A/80A	1	17.	T-3892	120980	Nozzle 80A Extended	5
3.	T-4188	120979	Deflector 40A/60A/80A/100A	1	18.	T-9998	220329	Nozzle 40A FineCut®	5
3a.	T-10410	220325 OEM	Deflector, CE 40A FineCut®	1	19.	T-11300	220059	Nozzle Gouging 60–80A	5
*4.	T-9832*	220047-UR	Shield, Machine 100A	1	20.	T-8892	220011	Nozzle 100A	5
*5.	T-9833*	220065-UR	Shield, Hand 100A	1	21.	T-4190	220064	Nozzle 100A Extended	5
6.	T-11299	120977	Shield Gouging 60–100A	1	#22.	T-4454#	120926-UR	Electrode 40A/60A/80A Long Life	5
7.	T-12067	220061	Retaining Cap, Ohmic 40A/60A/80A	1	23.	T-8401	120926	Electrode 40A/60A/80A	5
8.	T-12066	120928	Retaining Cap 40A/60A/80A	1	#24.	T-4455#	220037-UR	Electrode 100A, Long Life	5
9.	T-12071	220206	Retaining Cap, Ohmic 100A	1	25.	T-8872	220037	Electrode 100A	5
*10.	T-9881*	220048-UR	Retaining Cap 100A	1	#26.	T-4456#	120925-UR	Swirl Ring 40A/60A/80A Long Life	2
11.	T-8902	220048	Retaining Cap 100A	1	27.	T-8400	120925	Swirl Ring 40A/60A/80A	2
12.	T-3891	120932	Nozzle 40A	5	#28.	T-4457#	220051-UR	Swirl Ring 100A, Long Life	1
13.	T-8405	120931	Nozzle 60A	5	29.	T-11288	220051	Swirl Ring 100A	2
14.	T-3890	120927	Nozzle 80A	5	30.	Torch, cable leads. See following pages for details.			
15.	T-3889	220006	Nozzle 40A Extended	5					

* FULLY INTERCHANGEABLE AND COMPATIBLE WITH ORIGINAL PARTS, BUT DIFFERS FROM ORIGINAL DESIGN

\# MUST BE USED ONLY AS THE SET OF ELECTRODE & SWIRL RING, LIKE SHOWN IN THE PICTURE (UR DESIGN VERSION OR OEM DESIGN VERSION), SET OFFERS LIFETIME LONGER UP TO 50%

SMART SOLUTION – DESIGN IMPROVEMENTS THAT BRINGS ADDED VALUE SUCH AS IMPROVED LIFETIME OF CONSUMABLES, EXCELLENT CUT QUALITY, SPEED OR BETTER COST EFFECTIVENESS OF YOUR SYSTEM

Last update of this page: 18/11/2016. See Revision history for details.

WWW.THERMACUT.CZ
TEL.: +420 556 423 418
SALES@THERMACUT.CZ

WWW.THERMACUT.DE
TEL.: +49 (0) 27 39 40 33 0
INFO@THERMACUT.DE

WWW.THERMACUT.COM
TEL.: 1-603-542-6715
CUSTOMERSERVICE@THERMACUT.COM

THERMACUT®, FHT-EX® AND EX-TRAFIRE® ARE REGISTERED TRADEMARKS OF THERMACUT, K.S. AND MAY BE REGISTERED IN CZECH REPUBLIC AND/OR OTHER COUNTRIES. ALL OTHER TRADEMARKS ARE PROPERTIES OF THEIR RESPECTIVE OWNERS. THERMACUT IS NO WAY AFFILIATED WITH Hypertherm®.
MOST THERMACUT PARTS ARE MADE FOR OR BY AN IBG COMPANY. PARTS INDICATED WITH A OEM ARE ORIGINAL PARTS MANUFACTURED BY THE ABOVE NAMED MANUFACTURER AND ARE BEING RESOLD BY THERMACUT. THERMACUT RESERVES THE RIGHT TO SUBSTITUTE OEM PARTS IN PLACE OF THERMACUT PARTS.
VALID FROM FEBRUARY 2018 • PREVIOUS VERSION IS NO LONGER VALID. • © COPYRIGHT 2018 BY THERMACUT® CZECH REPUBLIC. ALL RIGHTS RESERVED.

REPLACEMENT PARTS SUITABLE FOR
Hypertherm®

POWERMAX® 1000 / POWERMAX® 1250 / POWERMAX® 1650
T60™/T60M™ torch, T80™/T80M™ torch, T100™/T100M™ torch

1

3

2

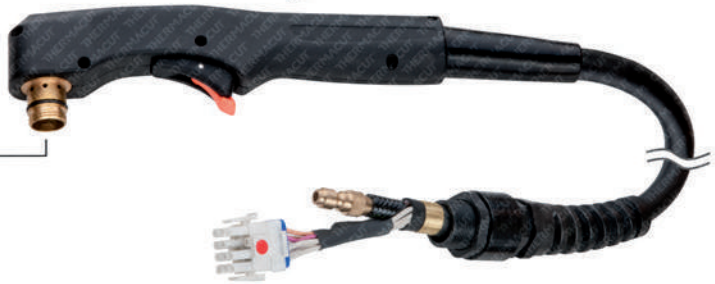

4

5

6

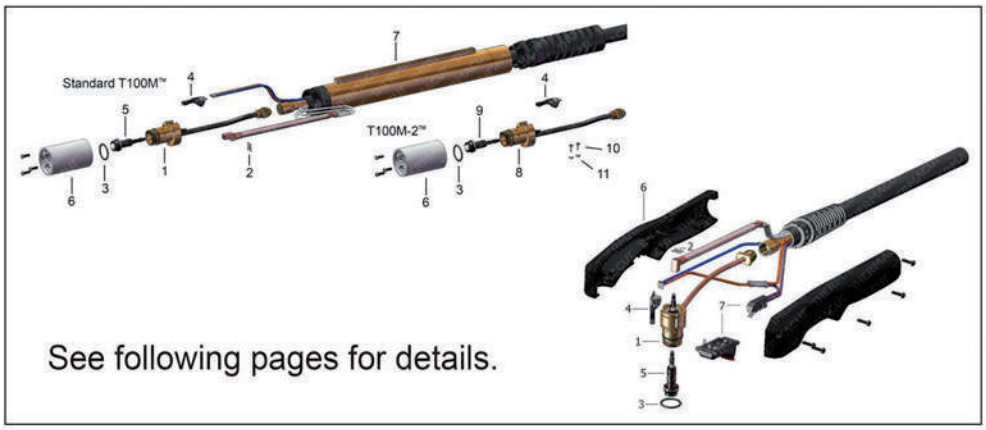

Last update of this page: 26/02/2016. See Revision history for details.

THERMACUT®, FHT-EX® AND EX-TRAFIRE® ARE REGISTERED TRADEMARKS OF THERMACUT, K.S. AND MAY BE REGISTERED IN CZECH REPUBLIC AND/OR OTHER COUNTRIES. ALL OTHER TRADEMARKS ARE PROPERTIES OF THEIR RESPECTIVE OWNERS. THERMACUT IS NO WAY AFFILIATED WITH Hypertherm®.
MOST THERMACUT PARTS ARE MADE FOR OR BY AN IBG COMPANY. PARTS INDICATED WITH A OEM ARE ORIGINAL PARTS MANUFACTURED BY THE ABOVE NAMED MANUFACTURER AND ARE BEING RESOLD BY THERMACUT. THERMACUT RESERVES THE RIGHT TO SUBSTITUTE OEM PARTS IN PLACE OF THERMACUT PARTS.
VALID FROM FEBRUARY 2018 • PREVIOUS VERSION IS NO LONGER VALID. • © COPYRIGHT 2018 BY THERMACUT® CZECH REPUBLIC. ALL RIGHTS RESERVED.

REPLACEMENT PARTS SUITABLE FOR
Hypertherm®

POWERMAX® 1000 / POWERMAX® 1250 / POWERMAX® 1650
T60™/T60M™ torch, T80™/T80M™ torch, T100™/T100M™ torch

Item	Part No.	Ref. No.	Description	Std. Pkg.
*1.	KT-1194*	083175-UR	T60M™ Machine Torch with Leads 4,6m (15')	1
*1.	KT-1138*	083174-UR	T60M™ Machine Torch with Leads 7,6m (25')	1
*1.	KT-1195*	083176-UR	T60M™ Machine Torch with Leads 10,7m (35')	1
*1.	KT-1196*	083177-UR	T60M™ Machine Torch with Leads 15,2m (50')	1
*1.	KT-1193*	087003-UR	T80M™ Machine Torch with Leads 4,6m (15')	1
*1.	KT-1134*	087004-UR	T80M™ Machine Torch with Leads 7,6m (25')	1
*1.	KT-1184*	087005-UR	T80M™ Machine Torch with Leads 10,7m (35')	1
*1.	KT-1163*	087006-UR	T80M™ Machine Torch with Leads 15,2m (50')	1
*1.	KT-1124*	059265-UR	T100M™ Machine Torch with Leads 7,6m (25')	1
*1.	KT-1170*	059268-UR	T100M™ Machine Torch with Leads 10,7m (35')	1
*1.	KT-1175*	059272-UR	T100M™ Machine Torch with Leads 15,2m (50')	1
*1.	KT-1450*	059315-UR	T100M-2™ Machine Torch with Leads 7,6m (25')	1
*1.	KT-1395*	059325-UR	T100M-2™ Machine Torch with Leads 15,2m (50')	1
*1.	KT-1259*	059300-UR	T100M™ Machine Torch with Leads 22,9m (75')	1
*2.	KT-1137*	083172-UR	T60™ Hand Torch with Leads 7,6m (25')	1
*2.	KT-1141*	083171-UR	T60™ Hand Torch with Leads 15,2m (50')	1
*2.	KT-1143*	083208-UR	T60™ Hand Torch with Leads 22,9m (75')	1
*2.	KT-1131*	087001-UR	T80™ Hand Torch with Leads 7,6m (25')	1
*2.	KT-1145*	087002-UR	T80™ Hand Torch with Leads 15,2m (50')	1
*2.	KT-1147*	087047-UR	T80™ Hand Torch with Leads 22,9m (75')	1
*2.	KT-1123*	059264-UR	T100™ Hand Torch with Leads 7,6m (25')	1
*2.	KT-1149*	059270-UR	T100™ Hand Torch with Leads 15,2m (50')	1
*2.	KT-1345*	059499-UR	= 059270-UR	1
3.	T-4510	058519	O-Ring	1
*4.	KT-1136*	128681-UR	T60™ Cable Leads, Hand 7,6m (25')	1
*4.	KT-1140*	128682-UR	T60™ Cable Leads, Hand 15,2m (50')	1
*5.	KT-1192*	128634-UR	T60M™/T80M™ Cable Leads, Machine 4,6m (15')	1
*5.	KT-1133*	128633-UR	T60M™/T80M™ Cable Leads, Machine 7,6m (25')	1
*5.	KT-1183*	128635-UR	T60M™/T80M™ Cable Leads, Machine 10,7m (35')	1
*5.	KT-1162*	128641-UR	T60M™/T80M™ Cable Leads, Machine 15,2m (50')	1
*4.	KT-1130*	128637-UR	T80™ Cable Leads, Hand 7,6m (25')	1
*4.	KT-1144*	128636-UR	T80™ Cable Leads, Hand 15,2m (50')	1
*4.	KT-1146*	128893-UR	T80™ Cable Leads, Hand 22,9m (75')	1
*4.	KT-1121*	128755-UR	T100™ Cable Leads, Hand 7,6m (25')	1
*4.	KT-1148*	128752-UR	T100™ Cable Leads, Hand 15,2m (50')	1
*5.	KT-1122*	128753-UR	T100M™ Cable Leads, Machine 7,6m (25')	1
*5.	KT-1169*	128751-UR	T100M™ Cable Leads, Machine 10,7m (35')	1
*5.	KT-1174*	128759-UR	T100M™ Cable Leads, Machine 15,2m (50')	1
*5.	KT-1258*	K.T100M.22,9M.K	T100M™ Cable Leads, Machine 22,9m (75')	1
*5.	KT-1467*	228222-UR	T100M-2™ Cable Leads, Machine 7,6m (25')	1
*5.	KT-1396*	228224-UR	T100M-2™ Cable Leads, Machine 15,2m (50')	1
6.	Torch, cable leads. See following pages for details.			

* FULLY INTERCHANGEABLE WITH ORIGINAL PARTS, BUT DIFFERS FROM ORIGINAL DESIGN

Last update of this page: 26/02/2016. See Revision history for details.

THERMACUT®
THE CUTTING COMPANY®

WWW.THERMACUT.CZ
TEL.: +420 556 423 418
SALES@THERMACUT.CZ

WWW.THERMACUT.DE
TEL.: +49 (0) 27 39 40 33 0
INFO@THERMACUT.DE

WWW.THERMACUT.COM
TEL.: 1-603-542-6715
CUSTOMERSERVICE@THERMACUT.COM

THERMACUT®, FHT-EX® AND EX-TRAFIRE® ARE REGISTERED TRADEMARKS OF THERMACUT, K.S. AND MAY BE REGISTERED IN CZECH REPUBLIC AND/OR OTHER COUNTRIES. ALL OTHER TRADEMARKS ARE PROPERTIES OF THEIR RESPECTIVE OWNERS. THERMACUT IS NO WAY AFFILIATED WITH Hypertherm®.
MOST THERMACUT PARTS ARE MADE FOR OR BY AN IBG COMPANY. PARTS INDICATED WITH A OEM ARE ORIGINAL PARTS MANUFACTURED BY THE ABOVE NAMED MANUFACTURER AND ARE BEING RESOLD BY THERMACUT. THERMACUT RESERVES THE RIGHT TO SUBSTITUTE OEM PARTS IN PLACE OF THERMACUT PARTS.
VALID FROM FEBRUARY 2018 • PREVIOUS VERSION IS NO LONGER VALID. • © COPYRIGHT 2018 BY THERMACUT® CZECH REPUBLIC. ALL RIGHTS RESERVED.

REPLACEMENT PARTS SUITABLE FOR
Hypertherm®

POWERMAX® 1000 / POWERMAX® 1250
T60M™/T80M™ machine torch

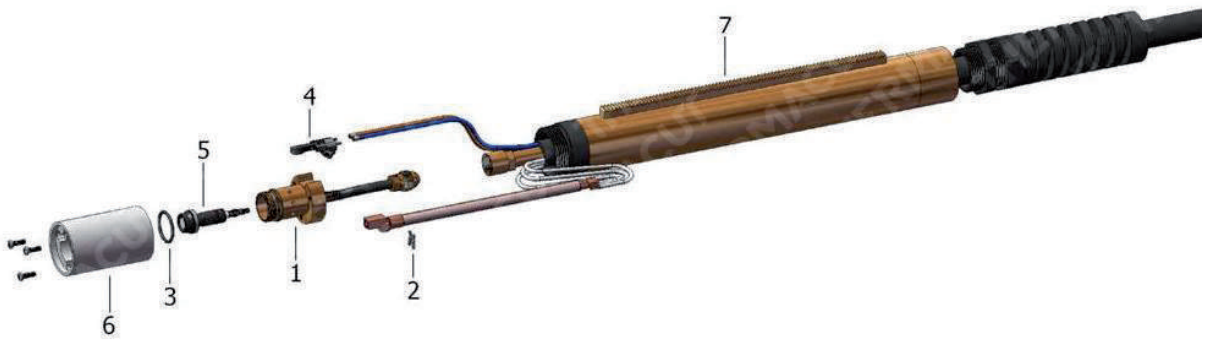

Item	Part No.	Ref. No.	Description	Std. Pkg.	Item	Part No.	Ref. No.	Description	Std. Pkg.
*1.	T-10319*	128640-UR	T60M™/T80M™ Torch Body Kit (Incl. items: 1, 2, 3, 5)	1	*5.	T-10253*	128521-UR	T60™, T80™/T60M™, T80M™ Torch Head Repair Kit	1
2.	T-10237	027889 OEM	Retaining Clip	1	*6.	PT-12161*	128643-UR	Torch Mounting Sleeve Replacement Kit With Screws	1
3.	T-4510	058519	O-Ring	1	7.	T-12159	128710	Torch Positioning Sleeve	1
*4.	T-10615*	128639-UR	TMT Cap-off Sensor Replacement Kit With Screws	1	1.–5.	T-10845	T-10845	T80M™ Torch Body + Cap Sensor	1

POWERMAX® 1000 / POWERMAX® 1250
T60™/T80™ hand torch

Item	Part No.	Ref. No.	Description	Std. Pkg.	Item	Part No.	Ref. No.	Description	Std. Pkg.
*1.	T-10281*	128564-UR	T60™/T80™ Torch Body Kit (Incl. items: 1, 2, 3, 5)	1	#6.	T-10623#	128644-UR	TMT Handle Kit With Screws	1
2.	T-10237	027889 OEM	Retaining Clip	1	#7.	T-10849#	T-10849	Trigger + Switch	1
3.	T-4510	058519	O-Ring	1	4.–7.	T-10838	T-10838	T60™/T80™/T100™ Handle Repl. Assy	1
#4.	T-10615#	128639-UR	TMT Cap-off Sensor Replacement Kit With Screws	1	1.–7.	T-10839	T-10839	T60™/T80™ Torch + Handle Repl. Assy	1
*5.	T-10253*	128521-UR	T60™,T80™/T60M™,T80M™ Torch Head Repair Kit	1	1.–5.	T-10846	T-10846	T80™ Torch Body + Cap Sensor	1

* FULLY INTERCHANGEABLE AND COMPATIBLE WITH ORIGINAL PARTS, BUT DIFFERS FROM ORIGINAL DESIGN

\# MUST BE USED ONLY AS A SET OF ITEMS 4, 6, 7, THIS COMPLETE SET IS INTERCHANGEABLE AND COMPATIBLE WITH ORIGINAL PARTS

Last update of this page: 28/02/2014. See Revision history for details.

THERMACUT®
THE CUTTING COMPANY

WWW.THERMACUT.CZ
TEL.: +420 556 423 418
SALES@THERMACUT.CZ

WWW.THERMACUT.DE
TEL.: +49 (0) 27 39 40 33 0
INFO@THERMACUT.DE

WWW.THERMACUT.COM
TEL.: 1-603-542-6715
CUSTOMERSERVICE@THERMACUT.COM

THERMACUT®, FHT-EX® AND EX-TRAFIRE® ARE REGISTERED TRADEMARKS OF THERMACUT, K.S. AND MAY BE REGISTERED IN CZECH REPUBLIC AND/OR OTHER COUNTRIES. ALL OTHER TRADEMARKS ARE PROPERTIES OF THEIR RESPECTIVE OWNERS. THERMACUT IS NO WAY AFFILIATED WITH Hypertherm®.
MOST THERMACUT PARTS ARE MADE FOR OR BY AN IBG COMPANY. PARTS INDICATED WITH A OEM ARE ORIGINAL PARTS MANUFACTURED BY THE ABOVE NAMED MANUFACTURER AND ARE BEING RESOLD BY THERMACUT. THERMACUT RESERVES THE RIGHT TO SUBSTITUTE OEM PARTS IN PLACE OF THERMACUT PARTS.
VALID FROM FEBRUARY 2018 • PREVIOUS VERSION IS NO LONGER VALID. • © COPYRIGHT 2018 BY THERMACUT® CZECH REPUBLIC. ALL RIGHTS RESERVED.

REPLACEMENT PARTS SUITABLE FOR
Hypertherm®

POWERMAX® 1650
T100M™, T100M-2™ machine torch

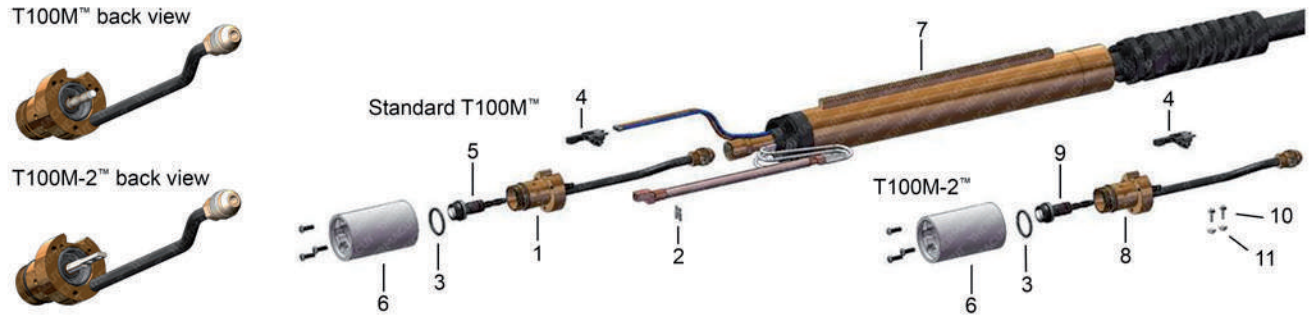

Item	Part No.	Ref. No.	Description	Std. Pkg.
*1.	T-10446*	128754-UR	T100M™ Torch Body Kit (Incl. items: 2, 3, 5)	1
2.	T-10237	027889 OEM	Retaining Clip	1
3.	T-4510	058519	O-Ring	1
*4.	T-10615*	128639-UR	TMT Cap-off Sensor Replacement Kit With Screws	1
*5.	T-10473*	128768-UR	T100™/T100M™ Torch Head Repair Kit	1
*6.	PT-12161*	128643-UR	Torch Mounting Sleeve Replacement Kit With Screws	1

Item	Part No.	Ref. No.	Description	Std. Pkg.
7.	T-12159	128710	Torch Positioning Sleeve	1
1.–5.	T-10847	T-10847	T100M™ Torch Body + Cap Sensor	1
NEW *8	T-11291	228523-UR	T100M-2™ Torch Body Kit (incl. items 3, 9, 10, 11)	1
NEW *9	T-11292	228522-UR	T100M-2™ Torch Head Repair Kit	1
NEW 10.	T-11344	075473	Machine Screws	2
NEW 11.	T-11345	075503	Lock Nuts	2

POWERMAX® 1650
T100™ hand torch

Item	Part No.	Ref. No.	Description	Std. Pkg.
*1.	T-10444*	128767-UR	T100™ Torch Body Kit (Incl. items: 2, 3, 5)	1
2.	T-10237	027889 OEM	Retaining Clip	1
3.	T-4510	058519	O-Ring	1
#4.	T-10615#	128639-UR	TMT Cap-off Sensor Replacement Kit With Srews	1
*5.	T-10473*	128768-UR	T100™/T100M™ Torch Head Repair Kit	1

Item	Part No.	Ref. No.	Description	Std. Pkg.
#6.	T-10623#	128644-UR	TMT Handle Kit With Screws	1
#7.	T-10849#	T-10849	Trigger + Switch	1
4.–7.	T-10838	T-10838	T60™/T80™/T100™ Handle Repl. Assy	1
1.–7.	T-10840	T-10840	T100™ Torch Handle Repl. Assy	1
1.–5.	T-10848	T-10848	T100™ Torch Body + Cap Sensor	1

* FULLY INTERCHANGEABLE AND COMPATIBLE WITH ORIGINAL PARTS, BUT DIFFERS FROM ORIGINAL DESIGN

\# MUST BE USED ONLY AS A SET OF ITEMS 4, 6, 7, THIS COMPLETE SET IS INTERCHANGEABLE AND COMPATIBLE WITH ORIGINAL PARTS

Last update of this page: 28/02/2014. See Revision history for details.

THERMACUT®
THE CUTTING COMPANY

WWW.THERMACUT.CZ
TEL.: +420 556 423 418
SALES@THERMACUT.CZ

WWW.THERMACUT.DE
TEL.: +49 (0) 27 39 40 33 0
INFO@THERMACUT.DE

WWW.THERMACUT.COM
TEL.: 1-603-542-6715
CUSTOMERSERVICE@THERMACUT.COM

THERMACUT®, FHT-EX® AND EX-TRAFIRE® ARE REGISTERED TRADEMARKS OF THERMACUT, K.S. AND MAY BE REGISTERED IN CZECH REPUBLIC AND/OR OTHER COUNTRIES. ALL OTHER TRADEMARKS ARE PROPERTIES OF THEIR RESPECTIVE OWNERS. THERMACUT IS NO WAY AFFILIATED WITH Hypertherm®.
MOST THERMACUT PARTS ARE MADE FOR OR BY AN IBG COMPANY. PARTS INDICATED WITH A OEM ARE ORIGINAL PARTS MANUFACTURED BY THE ABOVE NAMED MANUFACTURER AND ARE BEING RESOLD BY THERMACUT. THERMACUT RESERVES THE RIGHT TO SUBSTITUTE OEM PARTS IN PLACE OF THERMACUT PARTS.
VALID FROM FEBRUARY 2018 • PREVIOUS VERSION IS NO LONGER VALID. • © COPYRIGHT 2018 BY THERMACUT® CZECH REPUBLIC. ALL RIGHTS RESERVED.

REPLACEMENT PARTS SUITABLE FOR
Hypertherm®
POWERMAX® 30
T30v™ hand torch

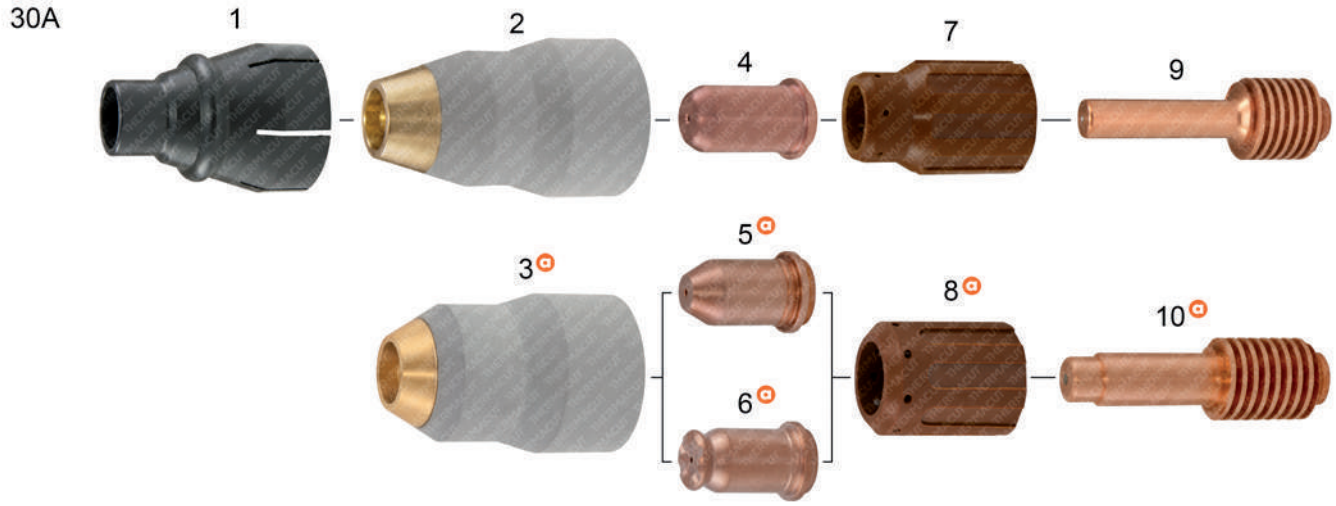

Item	Part No.	Ref. No.	Description	Std. Pkg.	Item	Part No.	Ref. No.	Description	Std. Pkg.
1.	T-10777	220569 OEM	Deflector	1	6.	T-11943	220480-D	Nozzle Drag	5
2.	T-11279	220483	Retaining Cap	1	7.	T-11235	220479	Swirl Ring	1
3.	T-11852	220483-UR	Retaining Cap	1	8.	T-11848	220479-UR	Swirl Ring	2
4.	T-11234	220480	Nozzle	5	9.	T-10758	220478 OEM	Electrode	5
5.	T-11849	220480-UR	Nozzle	5	10.	T-11850	220478-UR	Electrode	5

MUST BE USED ONLY AS A SET OF RETAINING CAP, NOZZLE, SWIRL RING, ELECTRODE, THIS COMPLETE SET IS COMPATIBLE WITH ORIGINAL TORCH BODY.

Last update of this page: 17/11/2015. See Revision history for details.

THERMACUT®
THE CUTTING COMPANY®

WWW.THERMACUT.CZ
TEL.: +420 556 423 418
SALES@THERMACUT.CZ

WWW.THERMACUT.DE
TEL.: +49 (0) 27 39 40 33 0
INFO@THERMACUT.DE

WWW.THERMACUT.COM
TEL.: 1-603-542-6715
CUSTOMERSERVICE@THERMACUT.COM

THERMACUT®, FHT-EX® AND EX-TRAFIRE® ARE REGISTERED TRADEMARKS OF THERMACUT, K.S. AND MAY BE REGISTERED IN CZECH REPUBLIC AND/OR OTHER COUNTRIES. ALL OTHER TRADEMARKS ARE PROPERTIES OF THEIR RESPECTIVE OWNERS. THERMACUT IS NO WAY AFFILIATED WITH Hypertherm®.
MOST THERMACUT PARTS ARE MADE FOR OR BY AN IBG COMPANY. PARTS INDICATED WITH A OEM ARE ORIGINAL PARTS MANUFACTURED BY THE ABOVE NAMED MANUFACTURER AND ARE BEING RESOLD BY THERMACUT. THERMACUT RESERVES THE RIGHT TO SUBSTITUTE OEM PARTS IN PLACE OF THERMACUT PARTS.
VALID FROM FEBRUARY 2018 • PREVIOUS VERSION IS NO LONGER VALID. • © COPYRIGHT 2018 BY THERMACUT® CZECH REPUBLIC. ALL RIGHTS RESERVED.

REPLACEMENT PARTS SUITABLE FOR
Hypertherm®

POWERMAX® 45
T30v™/T45v™ hand torch, T45m™ machine torch

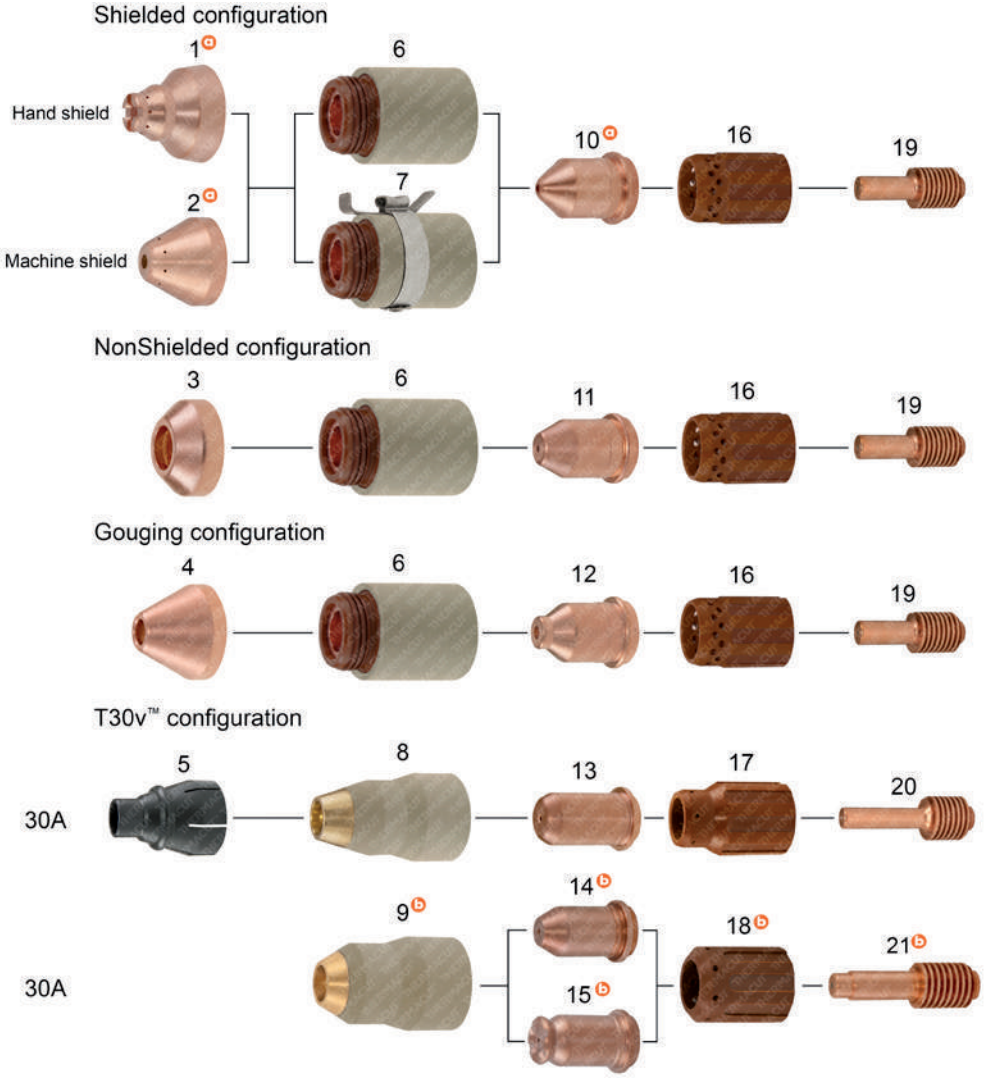

Item	Part No.	Ref. No.	Description	Std. Pkg.	Item	Part No.	Ref. No.	Description	Std. Pkg.
ⓐ 1.	T-11393ⓐ	220674-UR	Shield - hand cutting	1	12.	T-11394	220672	Nozzle-Gouging	5
ⓐ 2.	T-11398ⓐ	220673-UR	Shield - machine cutting	1	13.	T-11234	220480	Nozzle 30A	5
3.	T-11213	220717	Deflector	1	ⓑ 14.	T-11849ⓑ	220480-UR	Nozzle	5
4.	T-11392	220675	Shield-Gouging	1	ⓑ 15.	T-11943ⓑ	220480-D	Nozzle Drag	5
5.	T-10777	220569 OEM	Deflector (optional)	1	16.	T-11212	220670	Swirl Ring 45A	1
6.	T-12074	220713	Retaining Cap 45A (without IHS tab)	1	17.	T-11235	220479	Swirl Ring 30A	1
7.	T-12075	220719	Retaining Cap 45A (with IHS tab)	1	ⓑ 18.	T-11848ⓑ	220479-UR	Swirl Ring	2
8.	T-11279	220483	Retaining Cap 30A	1	19.	T-11236	220669	Electrode 45A	5
ⓑ 9.	T-11852ⓑ	220483-UR	Retaining Cap	1	20.	T-10758	220478 OEM	Electrode 30A	5
ⓐ 10.	T-11395ⓐ	220671-UR	Nozzle-Shielded	5	ⓑ 21.	T-11850ⓑ	220478-UR	Electrode	5
11.	T-11214	220718	Nozzle-NonShielded	5					

ⓐ MUST BE USED ONLY AS A SET OF SHIELD AND NOZZLE, THIS COMPLETE SET IS INTERCHANGEABLE AND COMPATIBLE WITH ORIGINAL PARTS

ⓑ MUST BE USED ONLY AS A SET OF RETAINING CAP, NOZZLE, SWIRL RING, ELECTRODE, THIS COMPLETE SET IS COMPATIBLE WITH ORIGINAL TORCH BODY

Last update of this page: 02/09/2016. See Revision history for details.

THERMACUT®
THE CUTTING COMPANY

WWW.THERMACUT.CZ
TEL.: +420 556 423 418
SALES@THERMACUT.CZ

WWW.THERMACUT.DE
TEL.: +49 (0) 27 39 40 33 0
INFO@THERMACUT.DE

WWW.THERMACUT.COM
TEL.: 1-603-542-6715
CUSTOMERSERVICE@THERMACUT.COM

THERMACUT®, FHT-EX® AND EX-TRAFIRE® ARE REGISTERED TRADEMARKS OF THERMACUT, K.S. AND MAY BE REGISTERED IN CZECH REPUBLIC AND/OR OTHER COUNTRIES. ALL OTHER TRADEMARKS ARE PROPERTIES OF THEIR RESPECTIVE OWNERS. THERMACUT IS NO WAY AFFILIATED WITH Hypertherm®.
MOST THERMACUT PARTS ARE MADE FOR OR BY AN IBG COMPANY. PARTS INDICATED WITH A OEM ARE ORIGINAL PARTS MANUFACTURED BY THE ABOVE NAMED MANUFACTURER AND ARE BEING RESOLD BY THERMACUT. THERMACUT RESERVES THE RIGHT TO SUBSTITUTE OEM PARTS IN PLACE OF THERMACUT PARTS.
VALID FROM FEBRUARY 2018 • PREVIOUS VERSION IS NO LONGER VALID. • © COPYRIGHT 2018 BY THERMACUT® CZECH REPUBLIC. ALL RIGHTS RESERVED.

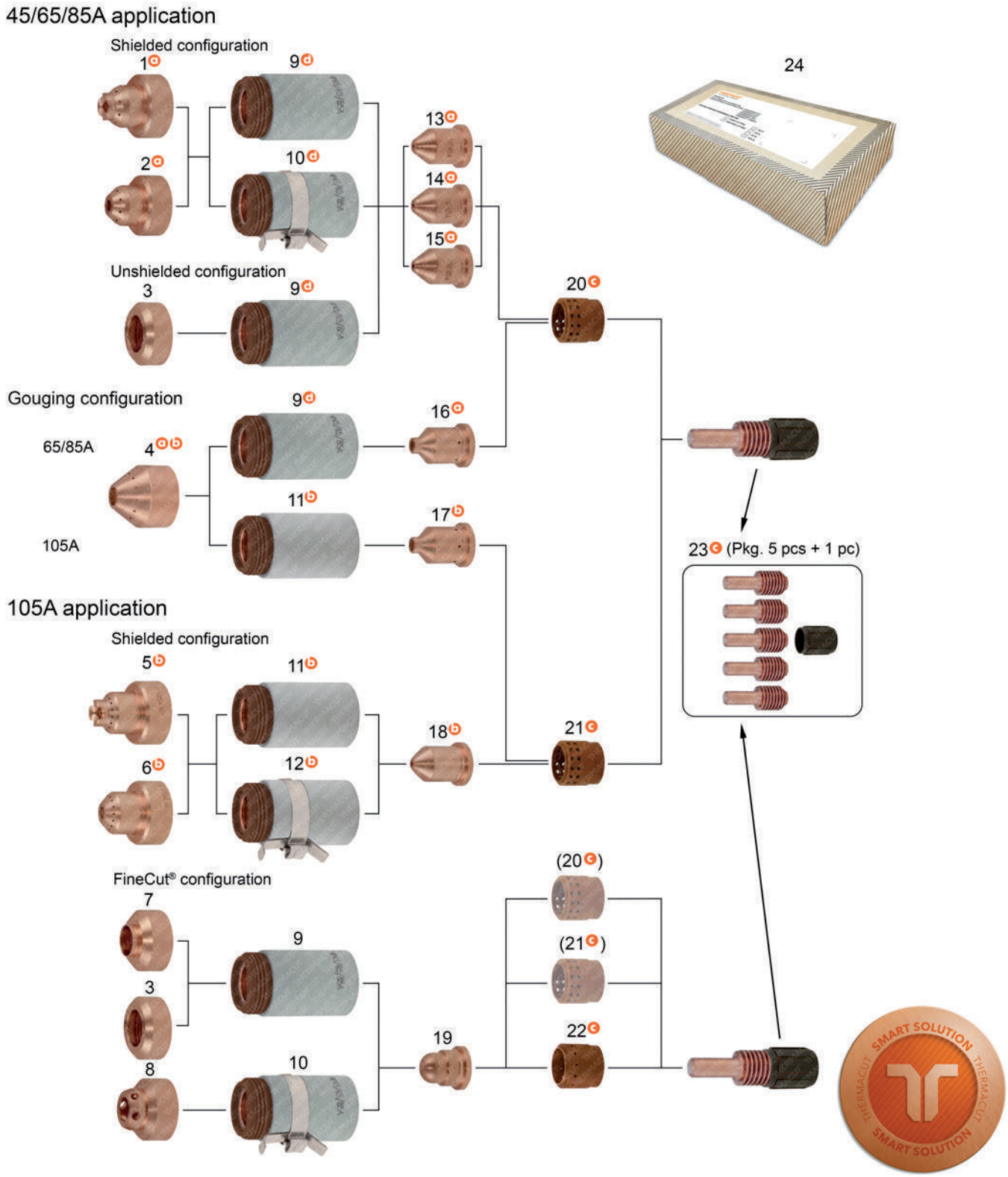

Last update of this page: 02/10/2016. See Revision history for details.

THERMACUT®, FHT-EX® AND EX-TRAFIRE® ARE REGISTERED TRADEMARKS OF THERMACUT, K.S. AND MAY BE REGISTERED IN CZECH REPUBLIC AND/OR OTHER COUNTRIES. ALL OTHER TRADEMARKS ARE PROPERTIES OF THEIR RESPECTIVE OWNERS. THERMACUT IS NO WAY AFFILIATED WITH Hypertherm®.
MOST THERMACUT PARTS ARE MADE FOR OR BY AN IBG COMPANY. PARTS INDICATED WITH A OEM ARE ORIGINAL PARTS MANUFACTURED BY THE ABOVE NAMED MANUFACTURER AND ARE BEING RESOLD BY THERMACUT. THERMACUT RESERVES THE RIGHT TO SUBSTITUTE OEM PARTS IN PLACE OF THERMACUT PARTS.
VALID FROM FEBRUARY 2018 • PREVIOUS VERSION IS NO LONGER VALID. • © COPYRIGHT 2018 BY THERMACUT® CZECH REPUBLIC. ALL RIGHTS RESERVED.

REPLACEMENT PARTS SUITABLE FOR
Hypertherm®

POWERMAX® 65 / POWERMAX® 85 / POWERMAX® 105
DURAMAX® hand torch, DURAMAX® machine torch

PRODUCT BROCHURE WITH DETAILS AT
WWW.THERMACUT.COM

Item	Part No.	Ref. No.	Description	Std. Pkg.
a 1.	T-11406 a	220818-UR	Shield 45/65/85A, Hand	1
a 2.	T-11404 a	220817-UR	Shield 45/65/85A, Machine	1
3.	T-11407	220955	Deflector 45/65/85/105A	1
a b 4.	T-12022	220798-UR	Shield 65/85/105A, Gouging	1
b 5.	T-11841 b	220992-UR	Shield 105A, Hand	1
b 6.	T-11842 b	220993-UR	Shield 105A, Machine	1
7.	T-12013	220931	Deflector 45A, FineCut®	1
8.	T-12014	220948	Shield 45A, FineCut®, Ohmic	1
d 9.	T-11423 d	220854-UR	Retaining Cap 45/65/85A	1
d 10.	T-11931 d	220953-UR	Retaining Cap 45/65/85A, Ohmic	1
b 11.	T-11422 b	T-11422	Retaining Cap 105A	1
b 12.	T-11932 b	T-11932	Retaining Cap 105A, Ohmic	1
a 13.	T-11378 a	220941-UR	Nozzle 45A	5
a 14.	T-11377 a	220819-UR	Nozzle 65A	5
a 15.	T-11405 a	220816-UR	Nozzle 85A	5
a 16.	T-12021 a	220797-UR	Nozzle 65/85A, Gouging	5
b 17.	T-12023 b	220991-UR	Nozzle 105A, Gouging	5

Item	Part No.	Ref. No.	Description	Std. Pkg.
b 18.	T-11840 b	220990-UR	Nozzle 105A	5
19.	T-11845	220930	Nozzle 45A, FineCut®	5
c 20.	T-11861 c	220857-UR	Swirl Ring 45–85A	1
c 21.	T-11930 c	220994-UR	Swirl Ring 105A	1
c 22.	T-12015 c	220947-UR	Swirl Ring 45A, FineCut®	1
c 23.	T-11883 c	220842x5	Electrode 45–105A (Pkg. 5 Pcs.)	1 × 5
		220842	Part is available in 5pcs set 220842x5 only	
**24.	T-11933**	T-11933	Starter Kit 45A, Hand	1
**	T-11934**	T-11934	Starter Kit 45A, Machine	1
**	T-11935**	T-11935	Starter Kit 65A, Hand	1
**	T-11936**	T-11936	Starter Kit 65A, Machine	1
**	T-11937**	T-11937	Starter Kit 85A, Hand	1
**	T-11938**	T-11938	Starter Kit 85A, Machine	1
**	T-11939**	T-11939	Starter Kit 105A, Hand	1
**	T-11940**	T-11940	Starter Kit 105A, Machine	1
**	T-11941**	T-11941	Empty box for Starter Kit, universal	1

a MUST BE USED ONLY AS A SET OF SHIELD AND NOZZLE, THIS COMPLETE SET IS INTERCHANGEABLE AND COMPATIBLE WITH ORIGINAL PARTS.

b MUST BE USED ONLY AS A SET OF SHIELD, RETAINING CAP AND NOZZLE, THIS COMPLETE SET IS INTERCHANGEABLE AND COMPATIBLE WITH ORIGINAL PARTS.

c MUST BE USED ONLY AS A SET OF ELECTRODE AND SWIRL RING, THIS COMPLETE SET IS INTERCHANGEABLE AND COMPATIBLE WITH ORIGINAL PARTS. ELECTRODES ARE PACKED TOGETHER WITH SWIRL RING SPRING HOLDER (BLACK PART) IN RATIO 5 ELECTRODES TO 1 HOLDER.

d RETAINING CAP UP TO 85A. FOR 105A – RETAINING CAP T-11422 HAS TO BE USED. DIFFERENT RETAINING CAP HAS TO BE USED FOR 105A AND FOR 45/65/85A.

** CONTENT: ELECTRODE 5 PCS (PACKED TOGETHER WITH SWIRL RING SPRING HOLDER), NOZZLE 5 PCS, SW. RING 1 PC, RET. CAP 1 PC, SHIELD 2 PCS

(20c), (21c) – ALSO POSSIBLE TO USE WITH FineCut® CONFIGURATION, BUT FOR BEST CUT QUALITY RESULTS - USE 220947-UR SMART SOLUTION – DESIGN IMPROVEMENTS THAT BRINGS ADDED VALUE SUCH AS IMPROVED LIFETIME OF CONSUMABLES, EXCELLENT CUT QUALITY, SPEED OR BETTER COST EFFECTIVENESS OF YOUR SYSTEM

Last update of this page: 02/10/2016. See Revision history for details.

THERMACUT®
THE CUTTING COMPANY

WWW.THERMACUT.CZ
TEL.: +420 556 423 418
SALES@THERMACUT.CZ

WWW.THERMACUT.DE
TEL.: +49 (0) 27 39 40 33 0
INFO@THERMACUT.DE

WWW.THERMACUT.COM
TEL.: 1-603-542-6715
CUSTOMERSERVICE@THERMACUT.COM

THERMACUT®, FHT-EX® AND EX-TRAFIRE® ARE REGISTERED TRADEMARKS OF THERMACUT, K.S. AND MAY BE REGISTERED IN CZECH REPUBLIC AND/OR OTHER COUNTRIES. ALL OTHER TRADEMARKS ARE PROPERTIES OF THEIR RESPECTIVE OWNERS. THERMACUT IS NO WAY AFFILIATED WITH Hypertherm®.
MOST THERMACUT PARTS ARE MADE FOR OR BY AN IBG COMPANY. PARTS INDICATED WITH A OEM ARE ORIGINAL PARTS MANUFACTURED BY THE ABOVE NAMED MANUFACTURER AND ARE BEING RESOLD BY THERMACUT. THERMACUT RESERVES THE RIGHT TO SUBSTITUTE OEM PARTS IN PLACE OF THERMACUT PARTS.
VALID FROM FEBRUARY 2018 • PREVIOUS VERSION IS NO LONGER VALID. • © COPYRIGHT 2018 BY THERMACUT® CZECH REPUBLIC. ALL RIGHTS RESERVED.

REPLACEMENT PARTS SUITABLE FOR
Hypertherm®
HT®2000 HySpeed®
PAC®200/T

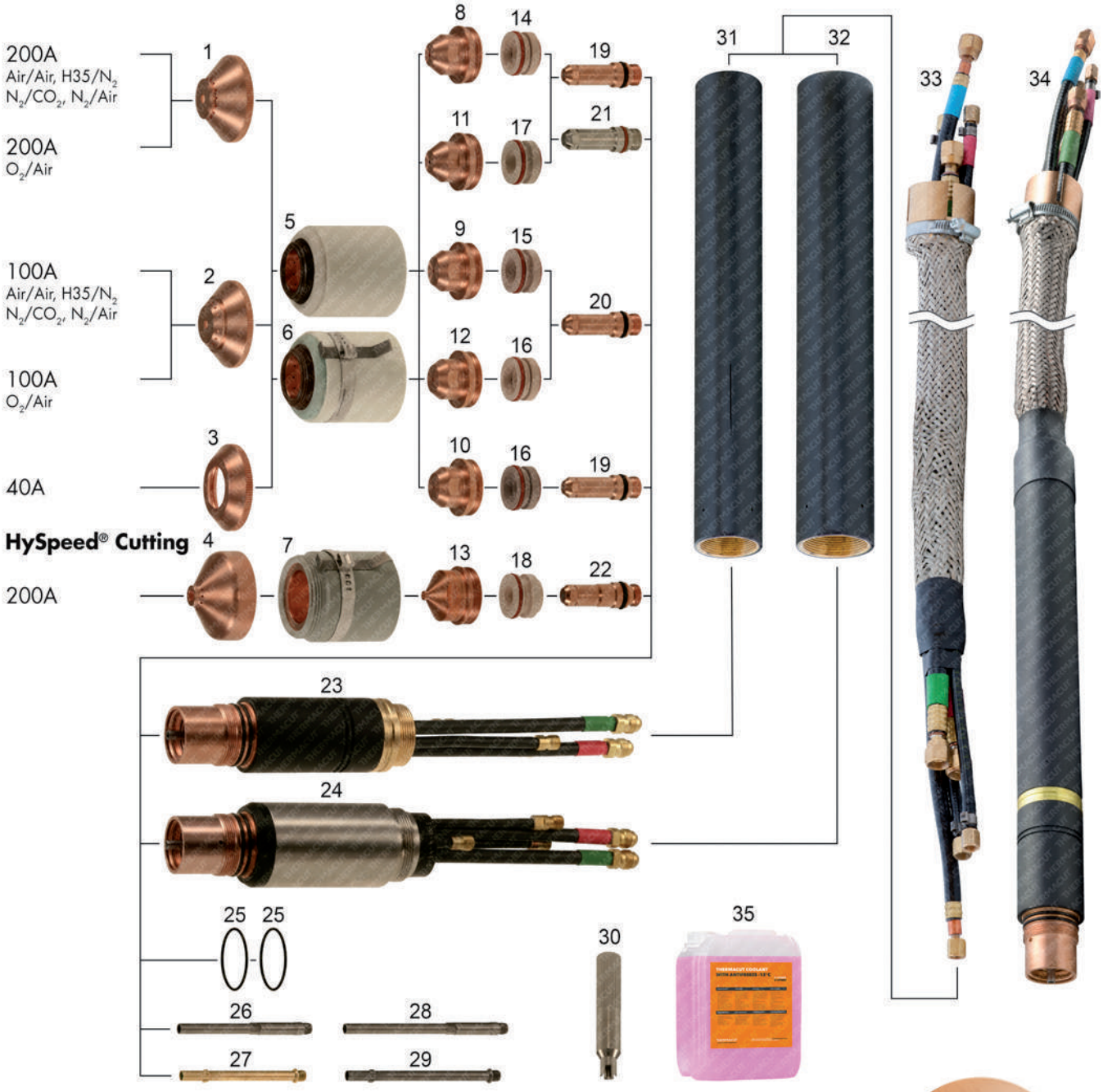

Parts HyPro™/MaxPro™ for line HT®2000 available also, see other pages for details.

Last update of this page: 02/02/2018. See Revision history for details.

THERMACUT®, FHT-EX® AND EX-TRAFIRE® ARE REGISTERED TRADEMARKS OF THERMACUT, K.S. AND MAY BE REGISTERED IN CZECH REPUBLIC AND/OR OTHER COUNTRIES. ALL OTHER TRADEMARKS ARE PROPERTIES OF THEIR RESPECTIVE OWNERS. THERMACUT IS NO WAY AFFILIATED WITH Hypertherm®.
MOST THERMACUT PARTS ARE MADE FOR OR BY AN IBG COMPANY. PARTS INDICATED WITH A OEM ARE ORIGINAL PARTS MANUFACTURED BY THE ABOVE NAMED MANUFACTURER AND ARE BEING RESOLD BY THERMACUT. THERMACUT RESERVES THE RIGHT TO SUBSTITUTE OEM PARTS IN PLACE OF THERMACUT PARTS.
VALID FROM FEBRUARY 2018 • PREVIOUS VERSION IS NO LONGER VALID. • © COPYRIGHT 2018 BY THERMACUT® CZECH REPUBLIC. ALL RIGHTS RESERVED.

REPLACEMENT PARTS SUITABLE FOR
Hypertherm®
HT®2000 HySpeed®
PAC®200/T

Item	Part No.	Ref. No.	Description	Std. Pkg.
*1.	T-4463*	020424-UR	Shield, Machine 200A	1
	T-0365	020424	Shield, Machine 200A	1
2.	T-0366	020448	Shield, Machine 100A	1
3.	T-0368	020688	Shield, Machine 40A	1
*NS	T-10317*	120260-UR	Shield 200A, O_2/Air, Bevel	1
*4.	T-4462*	220239-UR	Shield HySpeed® 200A	1
5.	T-0370	020423	Retaining Cap	1
6.	T-10242	120837	Retaining Cap, Ohmic	1
7.		220242 OEM	Retaining Cap HySpeed®, Ohmic	1
*NS	T-10304*	220238-UR	Retaining Cap HySpeed®	1
8.	T-0372	020608	Nozzle 200A	5
9.	T-0373	020611	Nozzle 100A	5
10.	T-0376	020689	Nozzle 40A	5
11.	T-0371	020605	Nozzle 200A, O_2	5
12.	T-1045	020690	Nozzle 100A	5
NS	T-2839	120259	Nozzle 200A, O_2/Air, Bevel	1
13.	T-8860	220237	Nozzle HySpeed® 200A	1
14.	T-1047	020679	Swirl Ring 200A	1
15.	T-0378	020607	Swirl Ring 100A	1
16.	T-0379	020613	Swirl Ring 40A, 100A	1
17.	T-1046	120833	Swirl Ring 200A, O_2	1
	T-10945	120834	Swirl Ring 200A, O_2 CCW	1
18.	T-10318	220236	Swirl Ring HySpeed® 200A	1
19.	T-0998	120667	Electrode 40A, 200A	5

Item	Part No.	Ref. No.	Description	Std. Pkg.
20.	T-0773	120547	Electrode 100A, 200A	5
NS	T-2838	120258	Electrode 200A, Extended	5
21.	T-4901	020664-AG	Electrode, SilverEX-®, 40A, 200A	5
22.	T-8859	220235	Electrode HySpeed® 200A	5
*	T-10261*	220235-UR	Electrode HySpeed® 200A	5
*NS	T-0382*	020415-UR	Electrode 100–200A	5
23.	T-9757	120584	MAX®200/HT®2000, Machine Torch Main Body (same as 020470)	1
24.	T-4066	120356	MAX®200/HT®2000, S.S. Machine Torch Main Body	1
25.	T-0383	044027	O-Ring	1
#26.	T-1813	020963	Water Tube, OEM Torch	1
**27.	T-4119	T-4119	Water Tube, TMT/OEM Torch	1
#28.	T-10876	120257	Water Tube Extended, OEM Torch	1
**29.	PT-11557	T-4120	Water Tube Extended, TMT/OEM Torch	1
30.	T-1397	T-1397	Water Tube Wrench, TMT	1
31.	T-0386	020431	Sleeve 1,75' (D 44,5mm for 120584 or 020470)	1
32.	T-1001	020041	Sleeve 2' (D 50,8mm for 120356)	1
33.	KT-1412	028659	HT®2000 Cable Leads, 6,1m (20')	1
	KT-1213	028546	HT®2000 Cable Leads, 7,6m (25')	1
	KT-1085	028662	HT®2000 Cable Leads, 12,2m (40')	1
	KT-1081	028547	HT®2000 Cable Leads, 15,2m (50')	1
34.			Cable with torch available on request.	
35.	Coolant Liquid. Details on the page 144, section Accessories.			
Different types of cable leads available on request				
Parts HyPro™/MaxPro™ for line HT®2000 available also, see other pages for details.				

COMPATIBLE WITH OEM TORCH ONLY, DOESN'T FIT TO THERMACUT TORCH
* FULLY INTERCHANGEABLE WITH ORIGINAL PARTS, BUT DIFFERS FROM ORIGINAL DESIGN
** COMPATIBLE WITH THERMACUT AND OEM TORCH
-AG HEAVY DUTY ELECTRODE, OFFERS BETTER LIFETIME
CCW COUNTER CLOCK WISE GAS SWIRLING, USE OF CCW PARTS WILL MAKE CUT ANGLE ON THE OPPOSITE SIDE, THAN WITH STANDARD CLOCK WISE (CW) SWIRLING PARTS.
SMART SOLUTION – DESIGN IMPROVEMENTS THAT BRINGS ADDED VALUE SUCH AS IMPROVED LIFETIME OF CONSUMABLES, EXCELLENT CUT QUALITY, SPEED OR BETTER COST EFFECTIVENESS OF YOUR SYSTEM

Last update of this page: 02/02/2018. See Revision history for details.

WWW.THERMACUT.CZ
TEL.: +420 556 423 418
SALES@THERMACUT.CZ
WWW.THERMACUT.DE
TEL.: +49 (0) 27 39 40 33 0
INFO@THERMACUT.DE
WWW.THERMACUT.COM
TEL.: 1-603-542-6715
CUSTOMERSERVICE@THERMACUT.COM

THERMACUT®, FHT-EX® AND EX-TRAFIRE® ARE REGISTERED TRADEMARKS OF THERMACUT, K.S. AND MAY BE REGISTERED IN CZECH REPUBLIC AND/OR OTHER COUNTRIES. ALL OTHER TRADEMARKS ARE PROPERTIES OF THEIR RESPECTIVE OWNERS. THERMACUT IS NO WAY AFFILIATED WITH Hypertherm®.
MOST THERMACUT PARTS ARE MADE FOR OR BY AN IBG COMPANY. PARTS INDICATED WITH A OEM ARE ORIGINAL PARTS MANUFACTURED BY THE ABOVE NAMED MANUFACTURER AND ARE BEING RESOLD BY THERMACUT. THERMACUT RESERVES THE RIGHT TO SUBSTITUTE OEM PARTS IN PLACE OF THERMACUT PARTS.
VALID FROM FEBRUARY 2018 • PREVIOUS VERSION IS NO LONGER VALID. • © COPYRIGHT 2018 BY THERMACUT® CZECH REPUBLIC. ALL RIGHTS RESERVED.

REPLACEMENT PARTS SUITABLE FOR
Hypertherm®

HyPro™2000/MaxPro™200 upgrade torch
For HT®2000 mild steel, stainless steel, aluminium

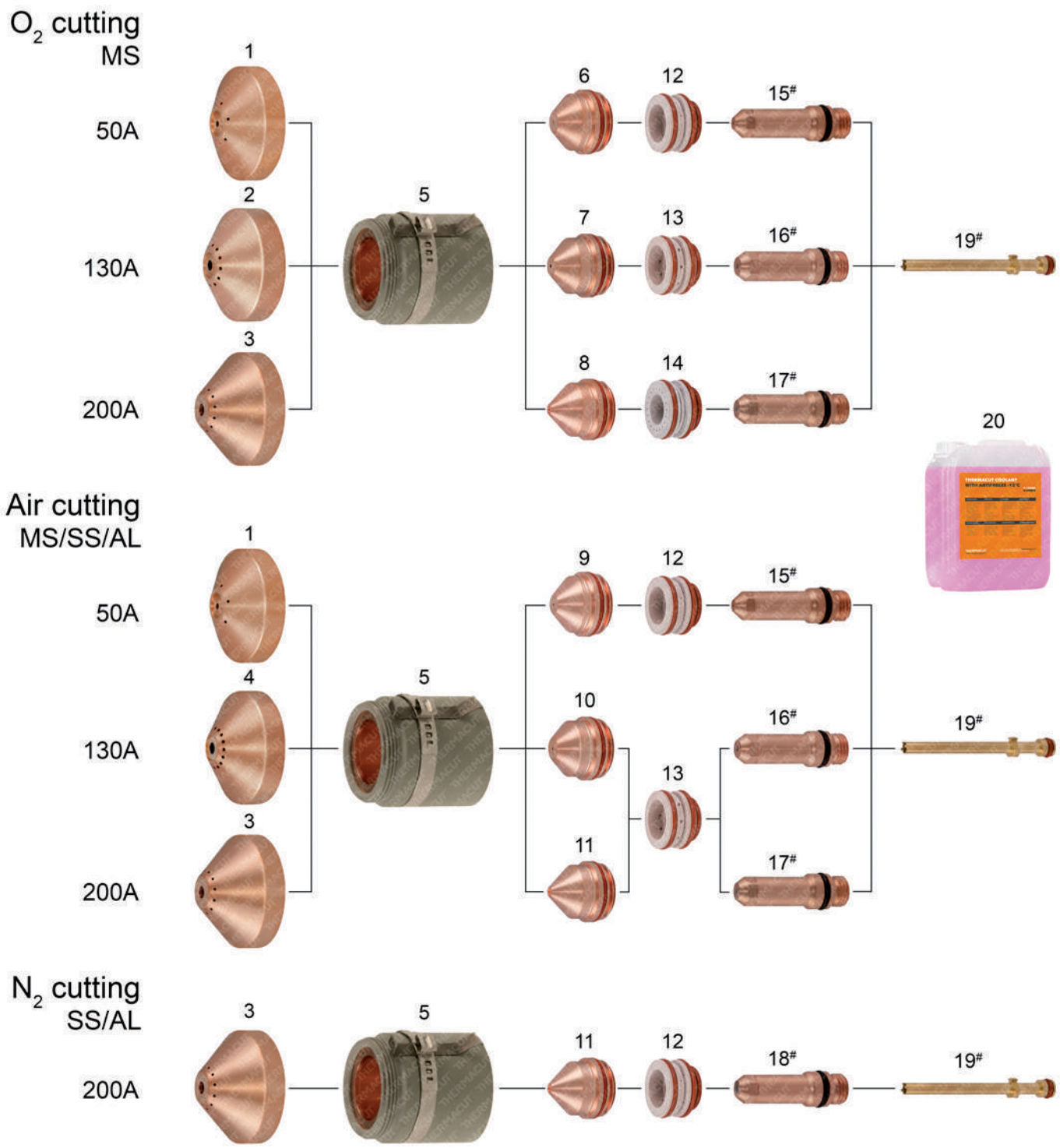

Parts HyPro™/MaxPro™ for line MAX®200 available also, see other pages for details.

Last update of this page: 31/01/2017. See Revision history for details.

THERMACUT®, FHT-EX® AND EX-TRAFIRE® ARE REGISTERED TRADEMARKS OF THERMACUT, K.S. AND MAY BE REGISTERED IN CZECH REPUBLIC AND/OR OTHER COUNTRIES. ALL OTHER TRADEMARKS ARE PROPERTIES OF THEIR RESPECTIVE OWNERS. THERMACUT IS NO WAY AFFILIATED WITH Hypertherm®.
MOST THERMACUT PARTS ARE MADE FOR OR BY AN IBG COMPANY. PARTS INDICATED WITH A OEM ARE ORIGINAL PARTS MANUFACTURED BY THE ABOVE NAMED MANUFACTURER AND ARE BEING RESOLD BY THERMACUT. THERMACUT RESERVES THE RIGHT TO SUBSTITUTE OEM PARTS IN PLACE OF THERMACUT PARTS.
VALID FROM FEBRUARY 2018 • PREVIOUS VERSION IS NO LONGER VALID. • © COPYRIGHT 2018 BY THERMACUT® CZECH REPUBLIC. ALL RIGHTS RESERVED.

REPLACEMENT PARTS SUITABLE FOR
Hypertherm®

HyPro™2000/MaxPro™200 upgrade torch
For HT®2000 mild steel, stainless steel, aluminium

PRODUCT BROCHURE WITH DETAILS AT
WWW.THERMACUT.COM

Item	Part No.	Ref. No.	Description	Std. Pkg.
NEW NEW 1.	T-11283	220532	Shield 50A O_2/Air	1
NEW 2.	T-11281	220491	Shield 130A O_2	1
3.	T-11375	220832	Shield 200A O_2/Air	1
NEW 4.	T-11284	220536	Shield 130A Air	1
NEW NEW 5.	T-11349*	220936-UR	Retaining Cap 50–200A O_2/Air, 200A N_2	1
NEW NEW NS	T-11348*	220935-UR	Retaining Cap 50–200A O_2/Air, 200A N_2 w/o IHS	1
NEW NEW 6.	T-11314*	220891-UR	Nozzle 50A O_2	5
NEW 7.	T-11316*	220893-UR	Nozzle 130A O_2	5
8.	T-11836*	220831-UR	Nozzle 200A O_2	1
NEW NEW 9.	T-11313*	220890-UR	Nozzle 50A Air	5
NEW 10.	T-11315*	220892-UR	Nozzle 130A O_2/Air	5

Item	Part No.	Ref. No.	Description	Std. Pkg.
11.	T-11837*	420044-UR	Nozzle 200A O_2/Air/N_2	5
NEW 12.	T-11282	220529	Swirl Ring 50A O_2 /Air, 200A N_2	1
NEW 13.	T-11280	220488	Swirl Ring 130A (200A)	1
NEW NEW 14.	T-11312	220834	Swirl Ring 200A O_2	1
NEW NEW 15.	T-11309#	220528-UR	Electrode 45A (50A)	5
NEW NEW 16.	T-11304#	220487-UR	Electrode 130A O_2/Air	5
NEW NEW 17.	T-11317#	220937-UR	Electrode 200A O_2/Air	5
NEW 18.	T-0382#	020415-UR	Electrode 100–200A	5
NEW 19.	T-11307#	220521-UR	Cooling Tube (use with TMT electrode)	1
20.	Coolant Liquid. Details on the page 144, section Accessories.			

Parts HyPro™/MaxPro™ for line MAX®200 available also, see other pages for details.

* FULLY INTERCHANGEABLE WITH ORIGINAL PARTS, BUT DIFFERS FROM ORIGINAL DESIGN

\# THERMACUT ELECTRODES HAS TO BE USED WITH THERMACUT DESIGN COOLING TUBE, OTHERWISE IT DOESN'T FIT TO THE TORCH, THERMACUT COOLING TUBE CAN BE USED FOR THERMACUT DESIGN ELECTRODES AND FOR ORIGINAL DESIGN TOO.

W/O WITHOUT

Last update of this page: 31/01/2017. See Revision history for details.

THERMACUT®
THE CUTTING COMPANY®

WWW.THERMACUT.CZ
TEL.: +420 556 423 418
SALES@THERMACUT.CZ

WWW.THERMACUT.DE
TEL.: +49 (0) 27 39 40 33 0
INFO@THERMACUT.DE

WWW.THERMACUT.COM
TEL.: 1-603-542-6715
CUSTOMERSERVICE@THERMACUT.COM

THERMACUT®, FHT-EX® AND EX-TRAFIRE® ARE REGISTERED TRADEMARKS OF THERMACUT, K.S. AND MAY BE REGISTERED IN CZECH REPUBLIC AND/OR OTHER COUNTRIES. ALL OTHER TRADEMARKS ARE PROPERTIES OF THEIR RESPECTIVE OWNERS. THERMACUT IS NO WAY AFFILIATED WITH Hypertherm®.
MOST THERMACUT PARTS ARE MADE FOR OR BY AN IBG COMPANY. PARTS INDICATED WITH A OEM ARE ORIGINAL PARTS MANUFACTURED BY THE ABOVE NAMED MANUFACTURER AND ARE BEING RESOLD BY THERMACUT. THERMACUT RESERVES THE RIGHT TO SUBSTITUTE OEM PARTS IN PLACE OF THERMACUT PARTS.
VALID FROM FEBRUARY 2018 • PREVIOUS VERSION IS NO LONGER VALID. • © COPYRIGHT 2018 BY THERMACUT® CZECH REPUBLIC. ALL RIGHTS RESERVED.

REPLACEMENT PARTS SUITABLE FOR
Hypertherm®
MAX®200
PAC®200T/E

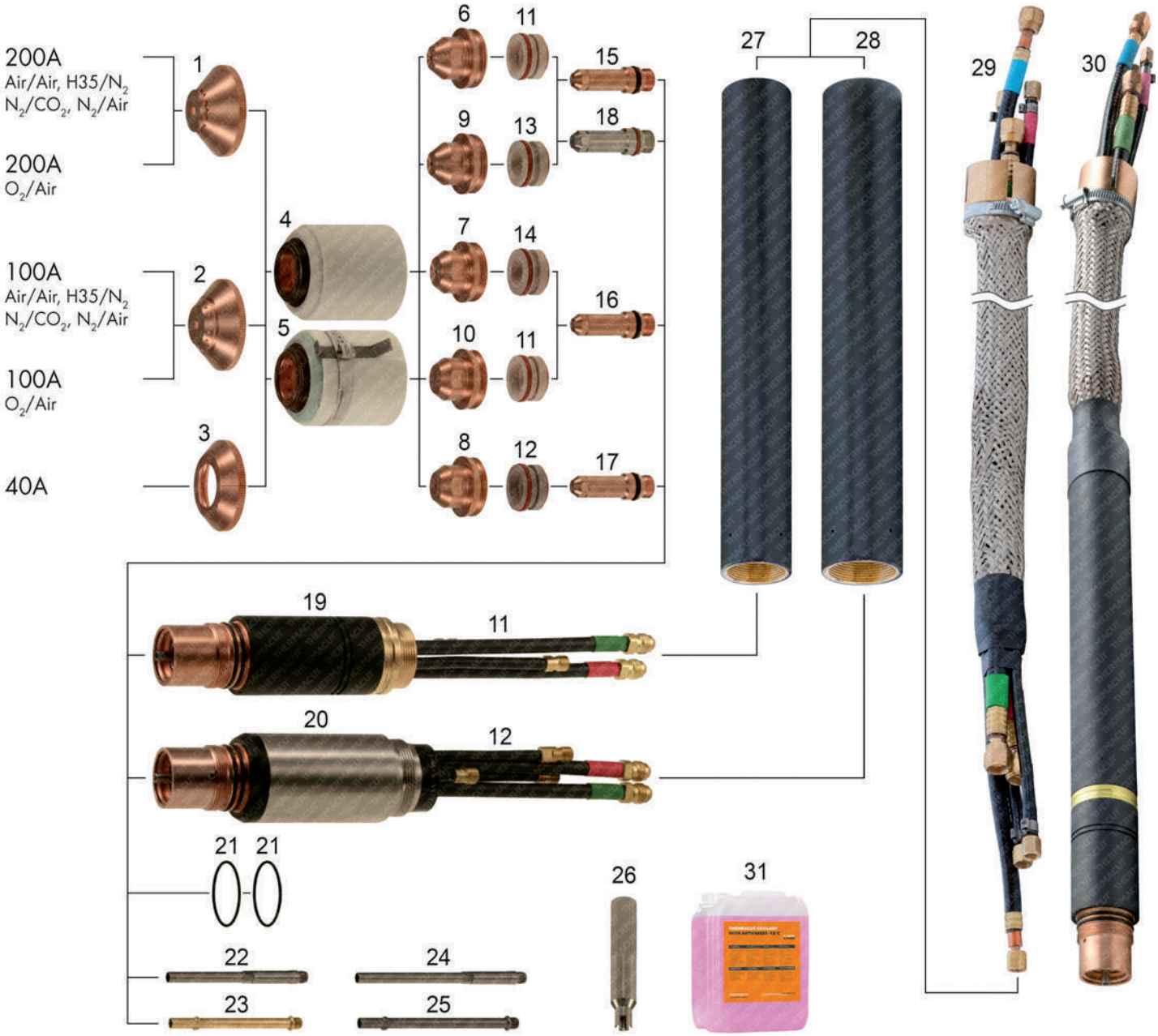

Parts HyPro™/MaxPro™ for line MAX®200 available also, see other pages for details.

Last update of this page: 02/02/2018. See Revision history for details.

THERMACUT®, FHT-EX® AND EX-TRAFIRE® ARE REGISTERED TRADEMARKS OF THERMACUT, K.S. AND MAY BE REGISTERED IN CZECH REPUBLIC AND/OR OTHER COUNTRIES. ALL OTHER TRADEMARKS ARE PROPERTIES OF THEIR RESPECTIVE OWNERS. THERMACUT IS NO WAY AFFILIATED WITH Hypertherm®.
MOST THERMACUT PARTS ARE MADE FOR OR BY AN IBG COMPANY. PARTS INDICATED WITH A OEM ARE ORIGINAL PARTS MANUFACTURED BY THE ABOVE NAMED MANUFACTURER AND ARE BEING RESOLD BY THERMACUT. THERMACUT RESERVES THE RIGHT TO SUBSTITUTE OEM PARTS IN PLACE OF THERMACUT PARTS.
VALID FROM FEBRUARY 2018 • PREVIOUS VERSION IS NO LONGER VALID. • © COPYRIGHT 2018 BY THERMACUT® CZECH REPUBLIC. ALL RIGHTS RESERVED.

REPLACEMENT PARTS SUITABLE FOR
Hypertherm®
MAX®200
PAC®200T/E

Item	Part No.	Ref. No.	Description	Std. Pkg.
*1.	T-4463*	020424-UR	Shield, Machine 200A	1
	T-0365	020424	Shield, Machine 200A	1
2.	T-0366	020448	Shield, Machine 100A	1
3.	T-0368	020688	Shield, Machine 40A	1
4.	T-0370	020423	Retaining Cap	1
5.	T-10242	120837	Retaining Cap, Ohmic	1
6.	T-0372	020608	Nozzle 200A	5
7.	T-0373	020611	Nozzle 100A	5
8.	T-0376	020689	Nozzle 40A	5
9.	T-0371	020605	Nozzle O_2 200A	5
10.	T-0375	020616	Nozzle O_2 100A	5
11.	T-0378	020607	Swirl Ring 100A, 200A	1
12.	T-0379	020613	Swirl Ring 40A	1
13.	T-0377	020604	Swirl Ring O_2 200A	1
14.	T-0380	020617	Swirl Ring O_2 100A	1
*15.	T-3926*	220021-UR	Electrode 40A, 200A	5
NS	T-2838	120258	Electrode 200A, Extended	5
16.	T-0773	120547	Electrode 100A, 200A	5
17.	T-0998	120667	Electrode 40A, 200A	5
18.	T-4901	020664-AG	Electrode, SilverEX-® 40A, 200A	5
*NS	T-0382*	020415-UR	Electrode 100–200A	5
19.	T-0384	020470	MAX®200, Machine Torch Main Body (same as 120584)	1

Item	Part No.	Ref. No.	Description	Std. Pkg.
20.	T-4066	120356	MAX®200/HT®2000, S.S. Machine Torch Main Body	1
21.	T-0383	044027	O-Ring	1
#22.	T-1813	020963	Water Tube, OEM Torch	1
**23.	T-4119	T-4119	Water Tube, TMT/OEM Torch	1
#24.	T-10876	120257	Water Tube Extended, OEM Torch	1
**25.	PT-11557	T-4120	Water Tube Extended, TMT/OEM Torch	1
26.	T-1397	T-1397	Water Tube Wrench, TMT	1
27.	T-0386	020431	Sleeve 1,75′ (D 44,5mm for 020470 or 120584)	1
28.	T-1001	020041	Sleeve 2′ (D 50,8mm for 120356)	1
29.	KT-1132	028383	MAX®200 Cable Leads, Mach. 7,6m (25′)	1
	KT-1317	028458	MAX®200 Cable Leads, Mach.10,7m (35′)	1
	KT-1212	028459	MAX®200 Cable Leads, Mach.12,2m (40′)	1
	KT-1072	028384	MAX®200 Cable Leads, Mach.15,2m (50′)	1
	KT-1078	K.MAX200.21M.K	MAX®200 Cable Leads, Mach. 21m (69′)	1
	KT-1161	028599	MAX®200 Cable Leads, Mach. 22,9m (75′)	1
30.	KT-1167	K.MAX200.7,6M	MAX®200 Mach. Torch with Leads 7,6m (25′)	1
	KT-1059	K.MAX200.10,7M	MAX®200 Mach. Torch with Leads 10,7m (35′)	1
	KT-1168	K.MAX200.15,2M	MAX®200 Mach. Torch with Leads 15,2m (50′)	1
	KT-1248	DEMO MAX200	MAX®200 Machine Torch with Leads (sample piece), exhibition only	1
31.	Coolant Liquid. Details on the page 144, section Accessories.			
	Different types of cable leads available on request			
	Parts HyPro™/MaxPro™ for line MAX®200 available also, see other pages for details.			

#	COMPATIBLE WITH OEM TORCH ONLY, DOESN'T FIT TO THERMACUT TORCH
*	FULLY INTERCHANGEABLE WITH ORIGINAL PARTS, BUT DIFFERS FROM ORIGINAL DESIGN
**	COMPATIBLE WITH THERMACUT AND OEM TORCH
-AG	HEAVY DUTY ELECTRODE, OFFERS BETTER LIFETIME

Last update of this page: 02/02/2018. See Revision history for details.

THERMACUT®, FHT-EX® AND EX-TRAFIRE® ARE REGISTERED TRADEMARKS OF THERMACUT, K.S. AND MAY BE REGISTERED IN CZECH REPUBLIC AND/OR OTHER COUNTRIES. ALL OTHER TRADEMARKS ARE PROPERTIES OF THEIR RESPECTIVE OWNERS. THERMACUT IS NO WAY AFFILIATED WITH Hypertherm®.
MOST THERMACUT PARTS ARE MADE FOR OR BY AN IBG COMPANY. PARTS INDICATED WITH A OEM ARE ORIGINAL PARTS MANUFACTURED BY THE ABOVE NAMED MANUFACTURER AND ARE BEING RESOLD BY THERMACUT. THERMACUT RESERVES THE RIGHT TO SUBSTITUTE OEM PARTS IN PLACE OF THERMACUT PARTS.
VALID FROM FEBRUARY 2018 • PREVIOUS VERSION IS NO LONGER VALID. • © COPYRIGHT 2018 BY THERMACUT® CZECH REPUBLIC. ALL RIGHTS RESERVED.

REPLACEMENT PARTS SUITABLE FOR
Hypertherm®

HyPro™2000/MaxPro™200 upgrade torch
For MAX®200 mild steel, stainless steel, aluminium

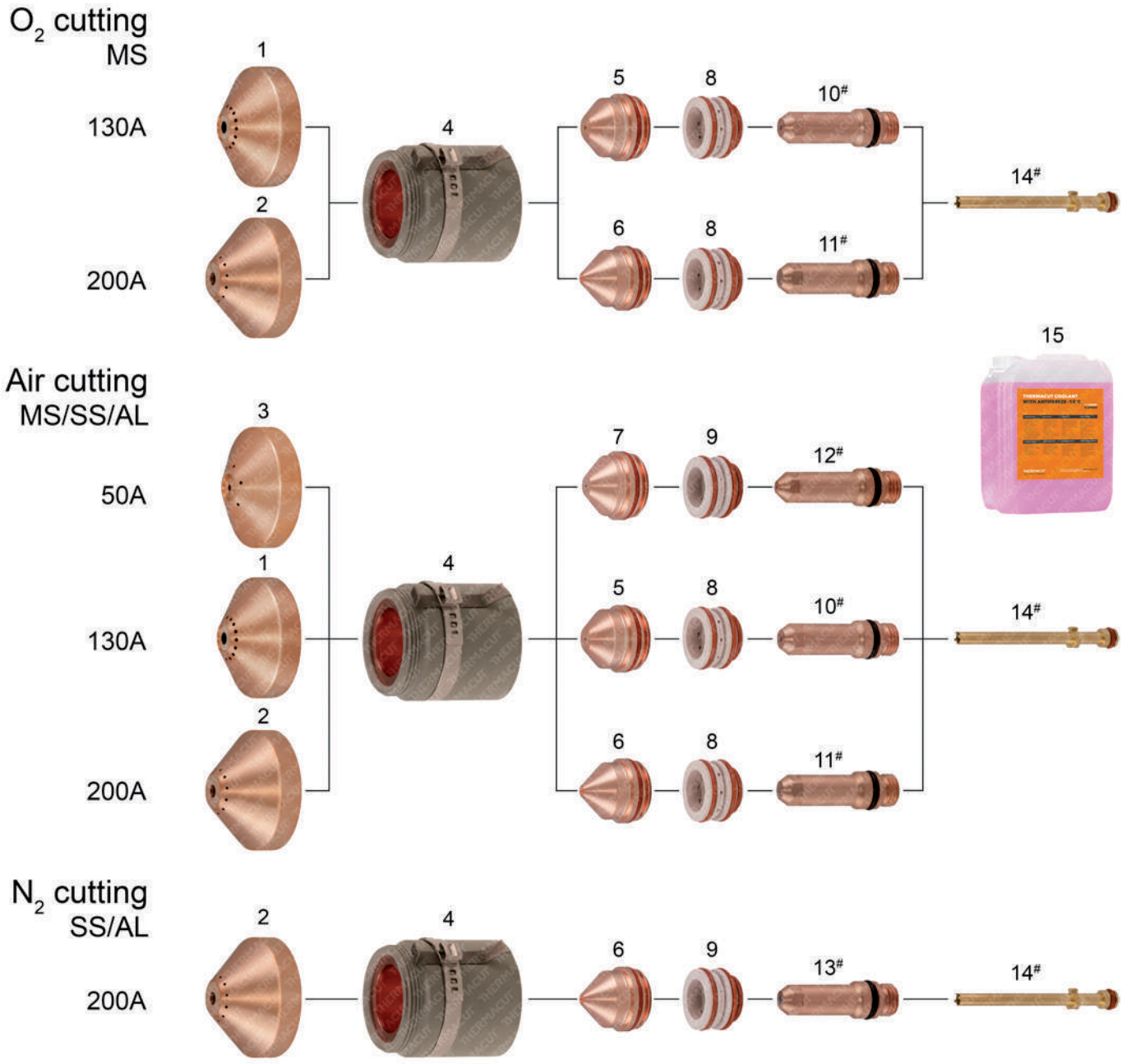

Parts HyPro™/MaxPro™ for line HT®2000 available also, see other pages for details.

Last update of this page: 31/01/2017. See Revision history for details.

THERMACUT®
THE CUTTING COMPANY

WWW.THERMACUT.CZ
TEL.: +420 556 423 418
SALES@THERMACUT.CZ

WWW.THERMACUT.DE
TEL.: +49 (0) 27 39 40 33 0
INFO@THERMACUT.DE

WWW.THERMACUT.COM
TEL.: 1-603-542-6715
CUSTOMERSERVICE@THERMACUT.COM

THERMACUT®, FHT-EX® AND EX-TRAFIRE® ARE REGISTERED TRADEMARKS OF THERMACUT, K.S. AND MAY BE REGISTERED IN CZECH REPUBLIC AND/OR OTHER COUNTRIES. ALL OTHER TRADEMARKS ARE PROPERTIES OF THEIR RESPECTIVE OWNERS. THERMACUT IS NO WAY AFFILIATED WITH Hypertherm®.
MOST THERMACUT PARTS ARE MADE FOR OR BY AN IBG COMPANY. PARTS INDICATED WITH A OEM ARE ORIGINAL PARTS MANUFACTURED BY THE ABOVE NAMED MANUFACTURER AND ARE BEING RESOLD BY THERMACUT. THERMACUT RESERVES THE RIGHT TO SUBSTITUTE OEM PARTS IN PLACE OF THERMACUT PARTS.
VALID FROM FEBRUARY 2018 • PREVIOUS VERSION IS NO LONGER VALID. • © COPYRIGHT 2018 BY THERMACUT® CZECH REPUBLIC. ALL RIGHTS RESERVED.

REPLACEMENT PARTS SUITABLE FOR
Hypertherm®

HyPro™2000/MaxPro™200 upgrade torch
For MAX®200 mild steel, stainless steel, aluminium

PRODUCT BROCHURE WITH DETAILS AT
WWW.THERMACUT.COM

Item	Part No.	Ref. No.	Description	Std. Pkg.
NEW 1.	T-11284	220536	Shield 130A O_2/Air	1
2.	T-11376	420045	Shield 200A O_2/Air/N_2	1
NEW 3.	T-11283	220532	Shield 50A Air	1
NEW 4.	T-11349*	220936-UR	Retaining Cap 50–200A O_2/Air, 200A N_2	1
NEW NS	T-11348*	220935-UR	Retaining Cap 50–200A O_2/Air, 200A N_2 w/o IHS	1
NEW 5.	T-11315*	220892-UR	Nozzle 130A O_2/Air	5
6.	T-11837*	420044-UR	Nozzle 200A O_2/Air/N_2	5
NEW 7.	T-11313*	220890-UR	Nozzle 50A Air	5
NEW 8.	T-11280	220488	Swirl Ring 130A (200A)	1

Item	Part No.	Ref. No.	Description	Std. Pkg.
NEW 9.	T-11282	220529	Swirl Ring 50A Air, 200A N_2	1
NEW 10.	T-11304#	220487-UR	Electrode 130A O_2/Air	5
NEW 11.	T-11317#	220937-UR	Electrode 200A O_2/Air	5
NEW 12.	T-11309#	220528-UR	Electrode 45A (50A)	5
NEW 13.	T-0382#	020415-UR	Electrode 100–200A	5
NEW 14.	T-11307#	220521-UR	Cooling Tube (use with TMT electrode)	1
15.	Coolant Liquid. Details on the page 144, section Accessories.			

Parts HyPro™/MaxPro™ for line HT®2000 available also, see other pages for details.

* FULLY INTERCHANGEABLE WITH ORIGINAL PARTS, BUT DIFFERS FROM ORIGINAL DESIGN

\# THERMACUT ELECTRODES HAS TO BE USED WITH THERMACUT DESIGN COOLING TUBE, OTHERWISE IT DOESN'T FIT TO THE TORCH, THERMACUT COOLING TUBE CAN BE USED FOR THERMACUT DESIGN ELECTRODES AND FOR ORIGINAL DESIGN TOO.

W/O WITHOUT

Last update of this page: 31/01/2017. See Revision history for details.

THERMACUT®, FHT-EX® AND EX-TRAFIRE® ARE REGISTERED TRADEMARKS OF THERMACUT, K.S. AND MAY BE REGISTERED IN CZECH REPUBLIC AND/OR OTHER COUNTRIES. ALL OTHER TRADEMARKS ARE PROPERTIES OF THEIR RESPECTIVE OWNERS. THERMACUT IS NO WAY AFFILIATED WITH Hypertherm®.
MOST THERMACUT PARTS ARE MADE FOR OR BY AN IBG COMPANY. PARTS INDICATED WITH A OEM ARE ORIGINAL PARTS MANUFACTURED BY THE ABOVE NAMED MANUFACTURER AND ARE BEING RESOLD BY THERMACUT. THERMACUT RESERVES THE RIGHT TO SUBSTITUTE OEM PARTS IN PLACE OF THERMACUT PARTS.
VALID FROM FEBRUARY 2018 • PREVIOUS VERSION IS NO LONGER VALID. • © COPYRIGHT 2018 BY THERMACUT® CZECH REPUBLIC. ALL RIGHTS RESERVED.

REPLACEMENT PARTS SUITABLE FOR
Hypertherm®

HT®400

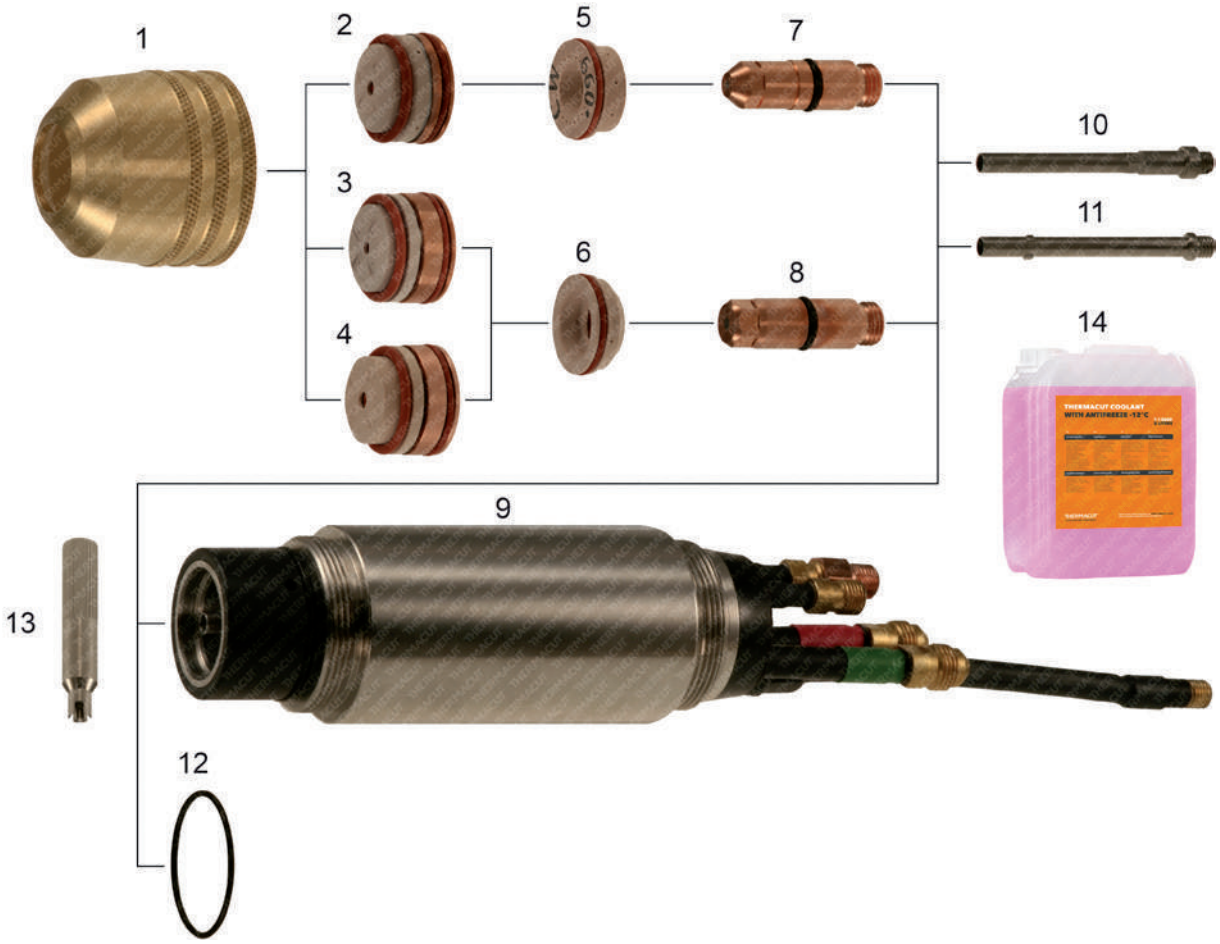

Item	Part No.	Ref. No.	Description	Std. Pkg.
1.	T-0088	020579	Retaining Cap	1
2.	T-0078	020086	Nozzle 260A, 340A, O_2	1
3.	T-0079	020089	Nozzle, .120, N_2	1
4.	T-0080	020084	Nozzle, .166, N_2	1
NS	T-1795	020392	Nozzle .099, O_2, CCW	1
NS	T-2928	120385	Nozzle 260A, O_2, Bevel, CCW	1
5.	T-0081	020096	Swirl Ring, O_2	1
	T-0087	020097	Swirl Ring, O_2, CCW	2
6.	T-0020	020039	Swirl Ring, .120/.166/.187, N_2	1
7.	T-0083	020081	Electrode, O_2	5
8.	T-0084	020082	Electrode, N_2	5
9.	T-0085	020080	Torch Body HT®400	1
#10.	T-1389#	020990 OEM	Water Tube (For OEM Torch)	1

Item	Part No.	Ref. No.	Description	Std. Pkg.
**11.	T-1388**	020990-UR	Water Tube (For TMT Torch)	1
12.	T-1006	044028	O-Ring	1
13.	T-1397	T-1397	Wrench for TMT Water Tube	1
NS	KT-1214	028139	HT®400, PAC®500 Cable Leads, 6,1m (20')	1
NS	KT-1154	028140	HT®400, PAC®500 Cable Leads, 7,6m (25')	1
NS	KT-1157	028141	HT®400, PAC®500 Cable Leads, 9,2m (30')	1
NS	KT-1153	028142	HT®400, PAC®500 Cable Leads, 10,7m (35')	1
NS	KT-1404	028143	HT®400, PAC®500 Cable Leads, 12,2m (40')	1
NS	KT-1217	K.HT400.15,2M.K	HT®400, PAC®500 Cable Leads, 15,2m (50')	1
NS	KT-1058	K.HT400.10,7M	HT®400 Mach. Torch with Leads 10,7m (35')	1
14.	Coolant Liquid. Details on the page 144, section Accessories.			
Different types of cable leads available on request				

COMPATIBLE WITH OEM TORCH ONLY, DOESN'T FIT TO THERMACUT TORCH
** COMPATIBLE WITH THERMACUT AND OEM TORCH
NS NOT SHOWN IN THE PICTURE
CCW COUNTER CLOCK WISE GAS SWIRLING, USE OF CCW PARTS WILL MAKE CUT ANGLE ON THE OPPOSITE SIDE, THAN WITH STANDARD CLOCK WISE (CW) SWIRLING PARTS.

Last update of this page: 11/04/2016. See Revision history for details.

THERMACUT®
THE CUTTING COMPANY

WWW.THERMACUT.CZ
TEL.: +420 556 423 418
SALES@THERMACUT.CZ

WWW.THERMACUT.DE
TEL.: +49 (0) 27 39 40 33 0
INFO@THERMACUT.DE

WWW.THERMACUT.COM
TEL.: 1-603-542-6715
CUSTOMERSERVICE@THERMACUT.COM

THERMACUT®, FHT-EX® AND EX-TRAFIRE® ARE REGISTERED TRADEMARKS OF THERMACUT, K.S. AND MAY BE REGISTERED IN CZECH REPUBLIC AND/OR OTHER COUNTRIES. ALL OTHER TRADEMARKS ARE PROPERTIES OF THEIR RESPECTIVE OWNERS. THERMACUT IS NO WAY AFFILIATED WITH Hypertherm®.
MOST THERMACUT PARTS ARE MADE FOR OR BY AN IBG COMPANY. PARTS INDICATED WITH A OEM ARE ORIGINAL PARTS MANUFACTURED BY THE ABOVE NAMED MANUFACTURER AND ARE BEING RESOLD BY THERMACUT. THERMACUT RESERVES THE RIGHT TO SUBSTITUTE OEM PARTS IN PLACE OF THERMACUT PARTS.
VALID FROM FEBRUARY 2018 • PREVIOUS VERSION IS NO LONGER VALID. • © COPYRIGHT 2018 BY THERMACUT® CZECH REPUBLIC. ALL RIGHTS RESERVED.

REPLACEMENT PARTS SUITABLE FOR
Hypertherm®
HT®4000
PAC®170/PAC®600

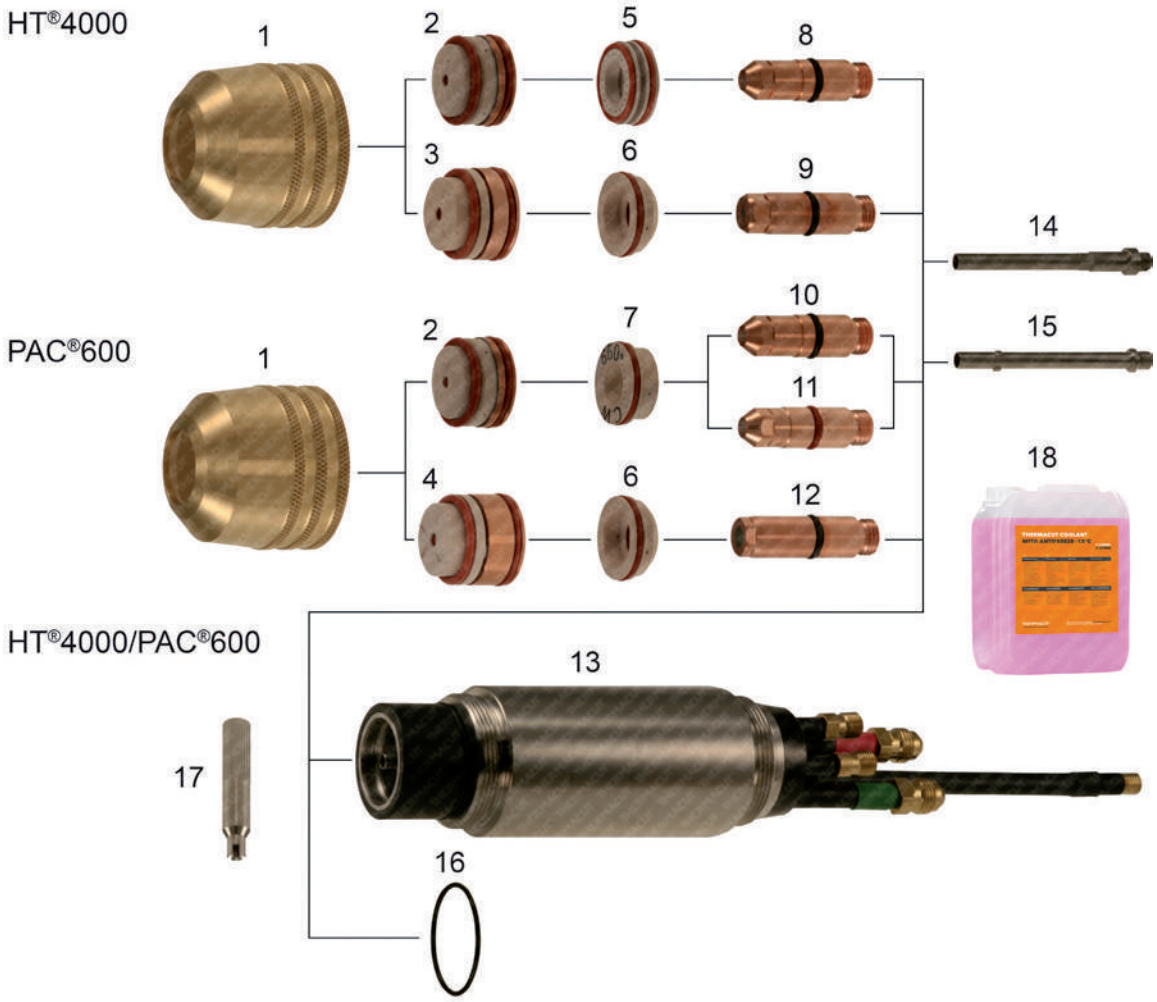

Item	Part No.	Ref. No.	Description	Std. Pkg.	Item	Part No.	Ref. No.	Description	Std. Pkg.
1.	T-0088	020579	Retaining Cap	1	8.	T-1293	020663	Electrode, PAC®170, O_2	5
2.	T-0078	020086	Nozzle 260A, 340A, O_2	1	9.	T-0084	020082	Electrode, N_2	5
3.	T-0080	020084	Nozzle, .166, N_2	1	10.	T-0083	020081	Electrode, O_2	5
4.	T-0509	020281	Nozzle, .120, N_2	1	11.	T-1382	120090	Electrode, O_2	5
	T-0510	020282	Nozzle, .166, N_2	1	12.	T-0499	020285	Electrode, N_2	5
	T-0511	020283	Nozzle, .187, N_2	1	13.	T-1393	020328	Torch Body PAC®170/PAC®600/PAC®620	1
	T-0512	020284	Nozzle, .220, N_2	1	#14.	T-1389#	020990 OEM	Water Tube (For OEM Torch)	1
5.	T-1292	020623	Swirl Ring, PAC®170	1	**15.	T-1388**	020990-UR	Water Tube (For TMT Torch)	1
	T-2927	120015	Swirl Ring, Bevel, CCW	1	16.	T-1006	044028	O-Ring	1
6.	T-0020	020039	Swirl Ring, .120/.166/.187, N_2	1	17.	T-1397	T-1397	Wrench for TMT Water Tube	1
7.	T-1002	020380	Swirl Ring, .099	1	18.	Coolant Liquid. Details on the page 144, section Accessories.			
	T-1003	020391	Swirl Ring, .099, CCW	2					

\# COMPATIBLE WITH OEM TORCH ONLY, DOESN'T FIT TO THERMACUT TORCH

** COMPATIBLE WITH THERMACUT AND OEM TORCH

CCW COUNTER CLOCK WISE GAS SWIRLING, USE OF CCW PARTS WILL MAKE CUT ANGLE ON THE OPPOSITE SIDE, THAN WITH STANDARD CLOCK WISE (CW) SWIRLING PARTS.

Last update of this page: 11/04/2016. See Revision history for details.

THERMACUT®, FHT-EX® AND EX-TRAFIRE® ARE REGISTERED TRADEMARKS OF THERMACUT, K.S. AND MAY BE REGISTERED IN CZECH REPUBLIC AND/OR OTHER COUNTRIES. ALL OTHER TRADEMARKS ARE PROPERTIES OF THEIR RESPECTIVE OWNERS. THERMACUT IS NO WAY AFFILIATED WITH Hypertherm®.
MOST THERMACUT PARTS ARE MADE FOR OR BY AN IBG COMPANY. PARTS INDICATED WITH A OEM ARE ORIGINAL PARTS MANUFACTURED BY THE ABOVE NAMED MANUFACTURER AND ARE BEING RESOLD BY THERMACUT. THERMACUT RESERVES THE RIGHT TO SUBSTITUTE OEM PARTS IN PLACE OF THERMACUT PARTS.
VALID FROM FEBRUARY 2018 • PREVIOUS VERSION IS NO LONGER VALID. • © COPYRIGHT 2018 BY THERMACUT® CZECH REPUBLIC. ALL RIGHTS RESERVED.

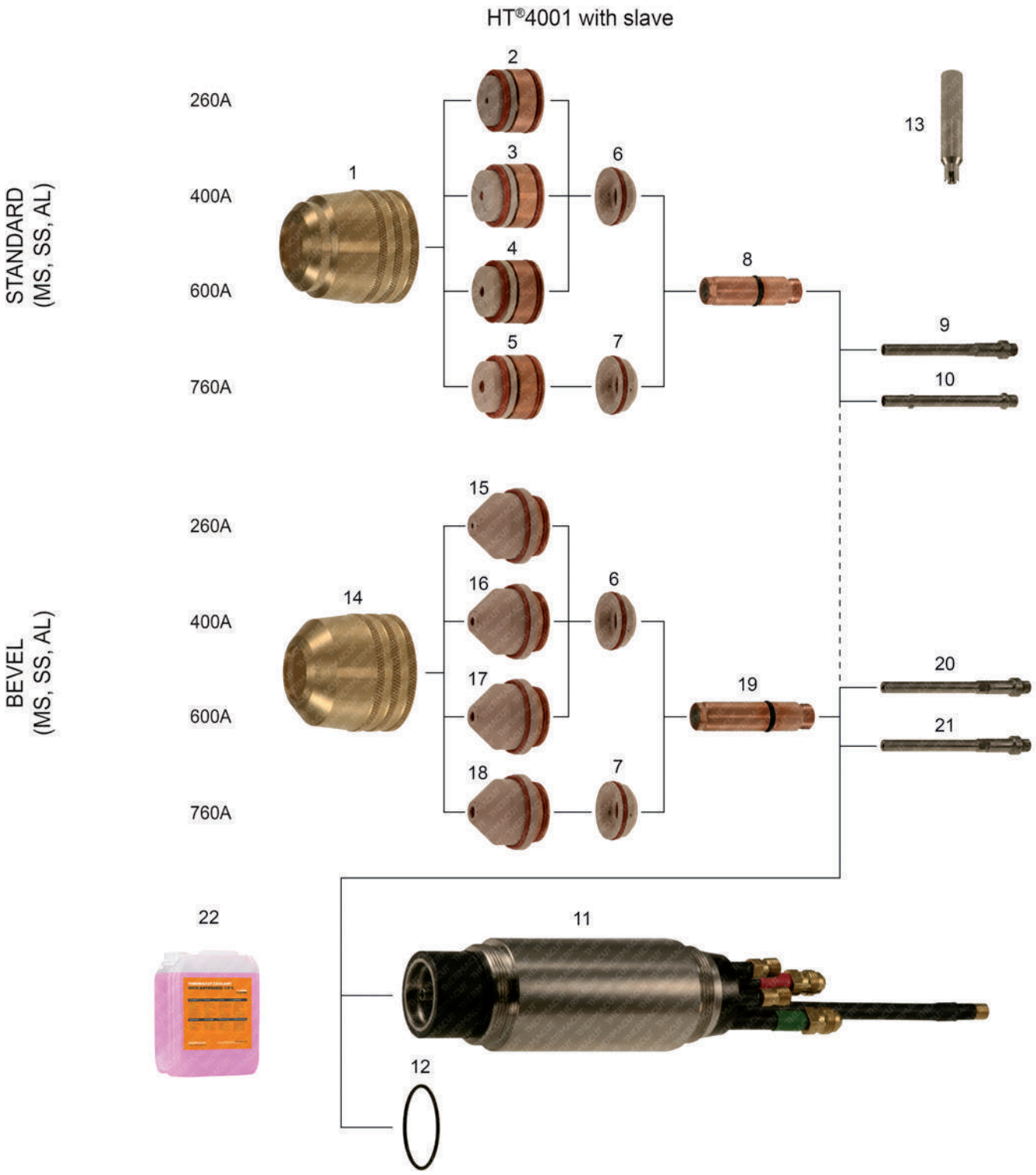

Last update of this page: 11/04/2016. See Revision history for details.

THERMACUT®, FHT-EX® AND EX-TRAFIRE® ARE REGISTERED TRADEMARKS OF THERMACUT, K.S. AND MAY BE REGISTERED IN CZECH REPUBLIC AND/OR OTHER COUNTRIES. ALL OTHER TRADEMARKS ARE PROPERTIES OF THEIR RESPECTIVE OWNERS. THERMACUT IS NO WAY AFFILIATED WITH Hypertherm®.
MOST THERMACUT PARTS ARE MADE FOR OR BY AN IBG COMPANY. PARTS INDICATED WITH A OEM ARE ORIGINAL PARTS MANUFACTURED BY THE ABOVE NAMED MANUFACTURER AND ARE BEING RESOLD BY THERMACUT. THERMACUT RESERVES THE RIGHT TO SUBSTITUTE OEM PARTS IN PLACE OF THERMACUT PARTS.
VALID FROM FEBRUARY 2018 • PREVIOUS VERSION IS NO LONGER VALID. • © COPYRIGHT 2018 BY THERMACUT® CZECH REPUBLIC. ALL RIGHTS RESERVED.

REPLACEMENT PARTS SUITABLE FOR
Hypertherm®
HT®4001
PAC®620 with slave

Item	Part No.	Ref. No.	Description	Std. Pkg.	Item	Part No.	Ref. No.	Description	Std. Pkg.
1.	T-0508	020580	Retaining Cap 260A–760A, N_2	1	13.	T-1397	T-1397	Wrench for TMT Water Tube	1
2.	T-0509	020281	Nozzle, .120, N_2	1	14.	T-8756	120390 OEM	Retaining Cap, Bevel	1
3.	T-0510	020282	Nozzle, .166, N_2	1	15.	T-11541	120386 OEM	Nozzle Bevel 260A, N_2	1
4.	T-0511	020283	Nozzle, .187, N_2	1	16.	T-1384	120387	Nozzle Bevel 400A, N_2	1
5.	T-0512	020284	Nozzle, .220, N_2	1	17.	T-11184	120388	Nozzle Bevel 600A, N_2	1
6.	T-0020	020039	Swirl Ring, .120/.166/.187, N_2	1	18.		120389 OEM	Nozzle Bevel 760A, N_2	1
7.	T-0022	020040	Swirl Ring, .220	1	19.	T-1387	020968	Electrode Bevel, N_2	5
8.	T-0499	020285	Electrode, N_2	5	20.	T-1390	020991 OEM	Water Tube Bevel (for OEM torch)	1
#9.	T-1389#	020990 OEM	Water Tube (For OEM Torch)	1	21.	T-9883	020991-UR	Water Tube Bevel (for TMT torch)	1
**10.	T-1388**	020990-UR	Water Tube (For TMT Torch)	1	NS	KT-1369	028516	PAC®620 Cable Leads, 15,2m (50')	1
11.	T-1393	020328	Torch Body PAC®170/PAC®600/PAC®620	1	22.	Coolant Liquid. Details on the page 144, section Accessories.			
12.	T-1006	044028	O-Ring	1					

* FULLY INTERCHANGEABLE WITH ORIGINAL PARTS, BUT DIFFERS FROM ORIGINAL DESIGN

\# COMPATIBLE WITH OEM TORCH ONLY, DOESN'T FIT TO THERMACUT TORCH

** COMPATIBLE WITH THERMACUT AND OEM TORCH

Last update of this page: 11/04/2016. See Revision history for details.

THERMACUT®, FHT-EX® AND EX-TRAFIRE® ARE REGISTERED TRADEMARKS OF THERMACUT, K.S. AND MAY BE REGISTERED IN CZECH REPUBLIC AND/OR OTHER COUNTRIES. ALL OTHER TRADEMARKS ARE PROPERTIES OF THEIR RESPECTIVE OWNERS. THERMACUT IS NO WAY AFFILIATED WITH Hypertherm®.
MOST THERMACUT PARTS ARE MADE FOR OR BY AN IBG COMPANY. PARTS INDICATED WITH A OEM ARE ORIGINAL PARTS MANUFACTURED BY THE ABOVE NAMED MANUFACTURER AND ARE BEING RESOLD BY THERMACUT. THERMACUT RESERVES THE RIGHT TO SUBSTITUTE OEM PARTS IN PLACE OF THERMACUT PARTS.
VALID FROM FEBRUARY 2018 • PREVIOUS VERSION IS NO LONGER VALID. • © COPYRIGHT 2018 BY THERMACUT® CZECH REPUBLIC. ALL RIGHTS RESERVED.

Hypertherm®

HT®4001
PAC®620 without slave

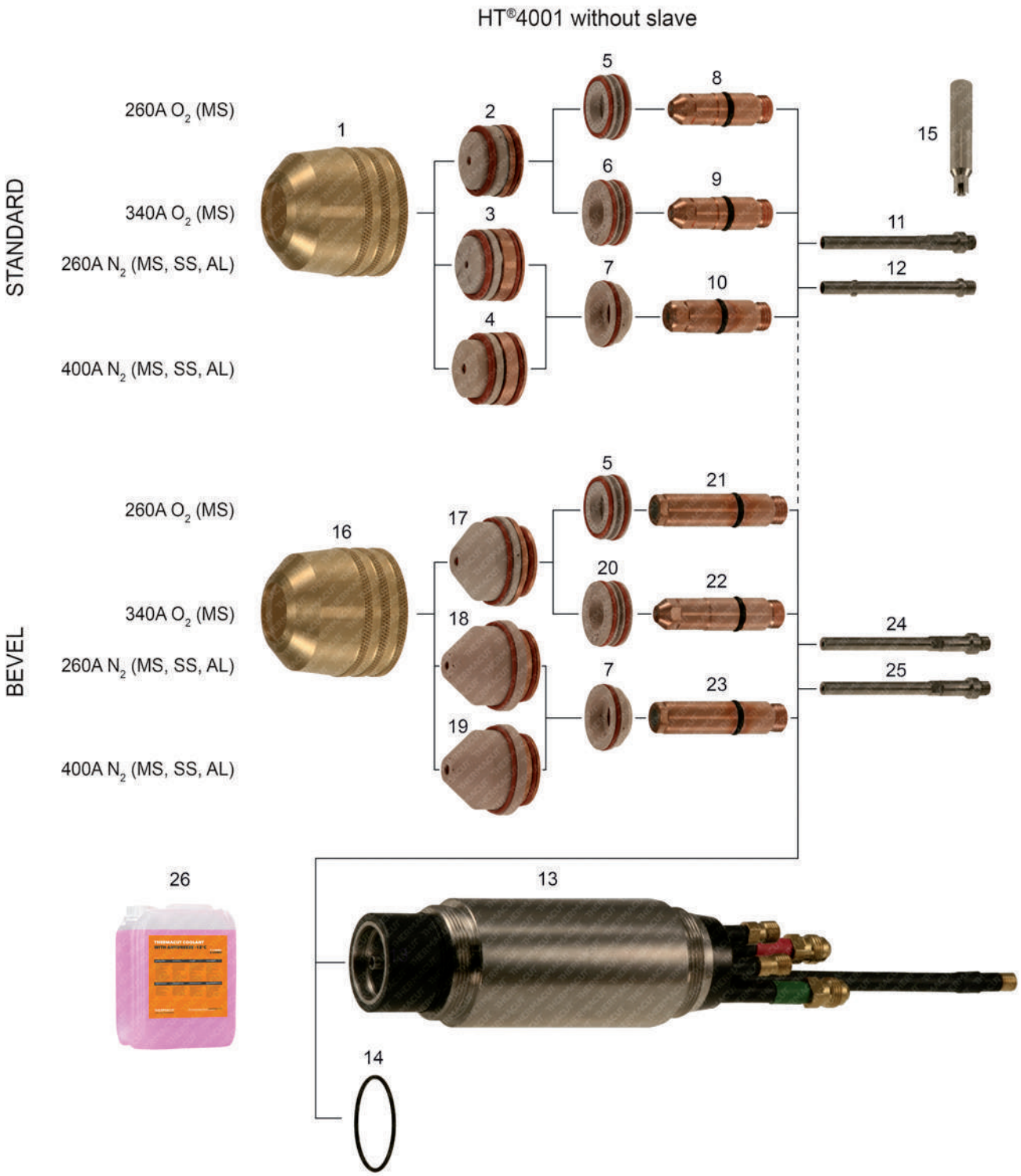

Last update of this page: 11/04/2016. See Revision history for details.

THERMACUT®, FHT-EX® AND EX-TRAFIRE® ARE REGISTERED TRADEMARKS OF THERMACUT, K.S. AND MAY BE REGISTERED IN CZECH REPUBLIC AND/OR OTHER COUNTRIES. ALL OTHER TRADEMARKS ARE PROPERTIES OF THEIR RESPECTIVE OWNERS. THERMACUT IS NO WAY AFFILIATED WITH Hypertherm®.
MOST THERMACUT PARTS ARE MADE FOR OR BY AN IBG COMPANY. PARTS INDICATED WITH A OEM ARE ORIGINAL PARTS MANUFACTURED BY THE ABOVE NAMED MANUFACTURER AND ARE BEING RESOLD BY THERMACUT. THERMACUT RESERVES THE RIGHT TO SUBSTITUTE OEM PARTS IN PLACE OF THERMACUT PARTS.
VALID FROM FEBRUARY 2018 • PREVIOUS VERSION IS NO LONGER VALID. • © COPYRIGHT 2018 BY THERMACUT® CZECH REPUBLIC. ALL RIGHTS RESERVED.

REPLACEMENT PARTS SUITABLE FOR
Hypertherm®
HT®4001
PAC®620 without slave

Item	Part No.	Ref. No.	Description	Std. Pkg.	Item	Part No.	Ref. No.	Description	Std. Pkg.
1.	T-0088	020579	Retaining Cap 260–400A	1	15.	T-1397	T-1397	Wrench for TMT Water Tube	1
2.	T-0078	020086	Nozzle 260A, 340A, O_2	1	16.	T-8756	120390 OEM	Retaining Cap, Bevel	1
3.	T-0079	020089	Nozzle, .120, N_2	1	17.	T-2841	120384	Nozzle Bevel 260A, 340A, O_2	1
4.	T-0080	020084	Nozzle, .166, N_2	1	18.	T-11541	120386 OEM	Nozzle Bevel 200A, N_2	1
5.	T-1292	020623	Swirl Ring 260A, O_2	1	19.	T-1384	120387	Nozzle Bevel 400A, N_2	1
6.	T-1381	120135	Swirl Ring 340A, O_2	1	20.	T-4189	120460	Swirl Ring 340A, O_2	1
7.	T-0020	020039	Swirl Ring, .120/.166/.187, N_2	1		T-3539	120461	Swirl Ring 340A ,O_2, CCW	1
8.	T-1293	020663	Electrode 260A, O_2	5	21.	T-4048	020975	Electrode Bevel 260A, O_2	5
*9.	T-2846*	120630-UR	Electrode 340A, O_2	5	22.	T-3842	120836	Electrode Bevel 340A, O_2	5
10.	T-0084	020082	Electrode 260A, 400A, N_2	5	23.	T-1387	020968	Electrode Bevel, N_2	5
#11.	T-1389#	020990 OEM	Water Tube (For OEM Torch)	1	24.	T-1390	020991 OEM	Water Tube Bevel (for OEM torch)	1
**12.	T-1388**	020990-UR	Water Tube (For TMT Torch)	1	25.	T-9883	020991-UR	Water Tube Bevel (for TMT torch)	1
13.	T-1393	020328	Torch Body PAC®170/PAC®600/PAC®620	1	NS	KT-1369	028516	PAC®620 Cable Leads, 15,2m (50')	1
14.	T-1006	044028	O-Ring	1	26.	Coolant Liquid. Details on the page 144, section Accessories.			

* FULLY INTERCHANGEABLE WITH ORIGINAL PARTS, BUT DIFFERS FROM ORIGINAL DESIGN
\# COMPATIBLE WITH OEM TORCH ONLY, DOESN'T FIT TO THERMACUT TORCH
** COMPATIBLE WITH THERMACUT AND OEM TORCH

Last update of this page: 11/04/2016. See Revision history for details.

THERMACUT®, FHT-EX® AND EX-TRAFIRE® ARE REGISTERED TRADEMARKS OF THERMACUT, K.S. AND MAY BE REGISTERED IN CZECH REPUBLIC AND/OR OTHER COUNTRIES. ALL OTHER TRADEMARKS ARE PROPERTIES OF THEIR RESPECTIVE OWNERS. THERMACUT IS NO WAY AFFILIATED WITH Hypertherm®.
MOST THERMACUT PARTS ARE MADE FOR OR BY AN IBG COMPANY. PARTS INDICATED WITH A OEM ARE ORIGINAL PARTS MANUFACTURED BY THE ABOVE NAMED MANUFACTURER AND ARE BEING RESOLD BY THERMACUT. THERMACUT RESERVES THE RIGHT TO SUBSTITUTE OEM PARTS IN PLACE OF THERMACUT PARTS.
VALID FROM FEBRUARY 2018 • PREVIOUS VERSION IS NO LONGER VALID. • © COPYRIGHT 2018 BY THERMACUT® CZECH REPUBLIC. ALL RIGHTS RESERVED.

HT®4400 HySpeed®

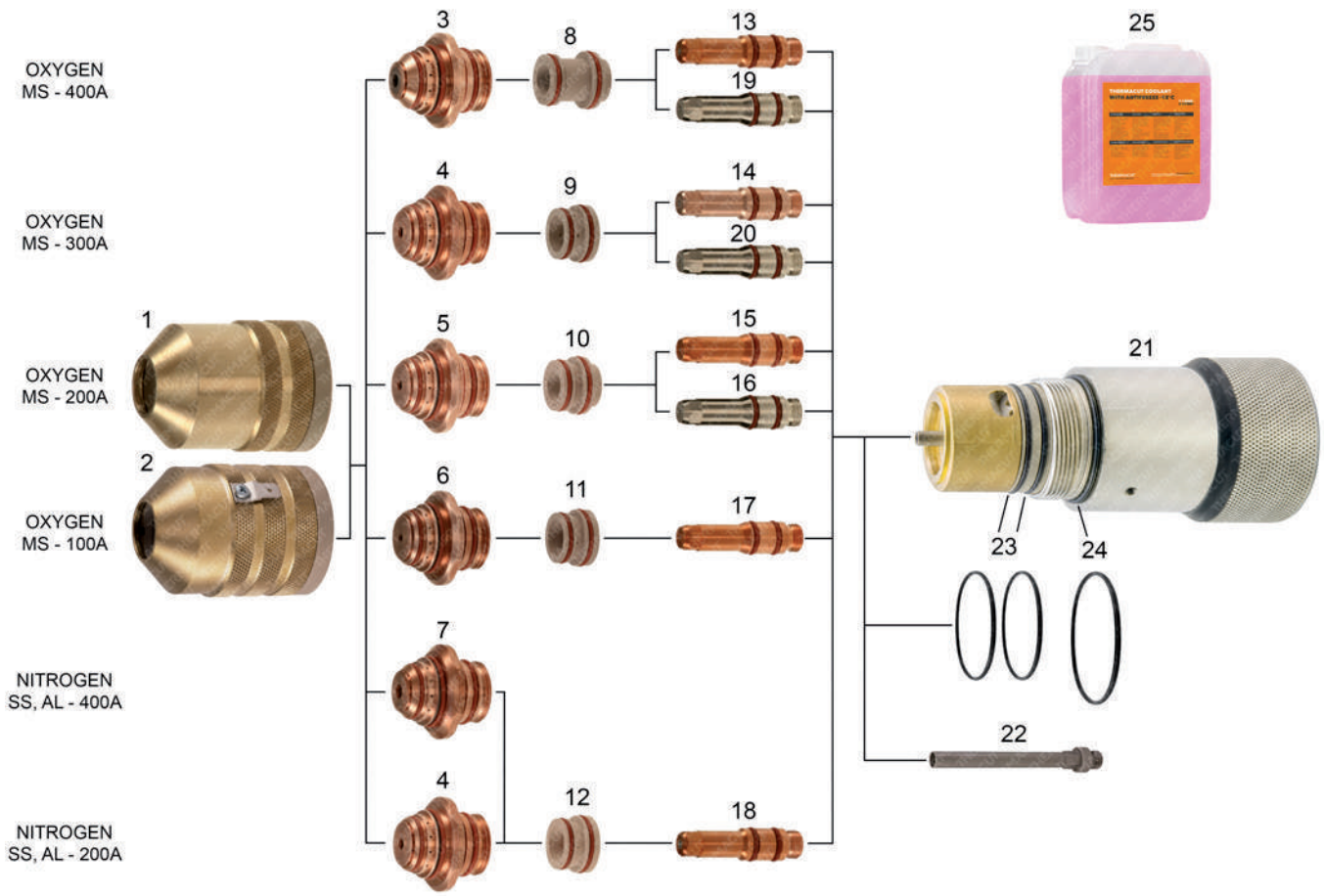

Last update of this page: 22/06/2016. See Revision history for details.

THERMACUT®, FHT-EX® AND EX-TRAFIRE® ARE REGISTERED TRADEMARKS OF THERMACUT, K.S. AND MAY BE REGISTERED IN CZECH REPUBLIC AND/OR OTHER COUNTRIES. ALL OTHER TRADEMARKS ARE PROPERTIES OF THEIR RESPECTIVE OWNERS. THERMACUT IS NO WAY AFFILIATED WITH Hypertherm®.
MOST THERMACUT PARTS ARE MADE FOR OR BY AN IBG COMPANY. PARTS INDICATED WITH A OEM ARE ORIGINAL PARTS MANUFACTURED BY THE ABOVE NAMED MANUFACTURER AND ARE BEING RESOLD BY THERMACUT. THERMACUT RESERVES THE RIGHT TO SUBSTITUTE OEM PARTS IN PLACE OF THERMACUT PARTS.
VALID FROM FEBRUARY 2018 • PREVIOUS VERSION IS NO LONGER VALID. • © COPYRIGHT 2018 BY THERMACUT® CZECH REPUBLIC. ALL RIGHTS RESERVED.

HT®4400 HySpeed®

Item	Part No.	Ref. No.	Description	Std. Pkg
1.	T-10110	120786	Retaining Cap	1
2.	T-10111	120907	Retaining Cap (With IHS Tab)	1
*3.	T-8716*	120934-UR	Nozzle 400A O_2 CW	1
*	T-9624*	120935-UR	Nozzle 400A O_2 CCW	1
*4.	T-8714*	120794-UR	Nozzle 300A O_2/200A N_2 CW	1
*5.	T-8713*	120787-UR	Nozzle 200A O_2 CW	1
*6.	T-8712*	120777-UR	Nozzle 100A O_2 CW	1
*7.	T-8715*	120856-UR	Nozzle 400A N_2 CW	1
8.	T-10112	120939	Swirl Ring 400A O_2 CW	1
	T-10866	120940	Swirl Ring 400A O_2 CCW	1
9.	T-10113	120913	Swirl Ring 300A O_2 CW	1
10.	T-10114	120791	Swirl Ring 200A O_2 CW	1
11.	T-10115	120783	Swirl Ring 100A O_2 CW	1
12.	T-10116	120853	Swirl Ring 400A N_2 CW	1
*13.	T-10182*	120810-UR	Electrode-HFROD 400A O_2	5

Item	Part No.	Ref. No.	Description	Std. Pkg.
NS	T-10857	120810	Electrode-HFTUBE 400A O_2 (i)	5
*14.	T-10181*	120802-UR	Electrode-HFROD 300A O_2	5
NS	T-10942	120802	Electrode-HFTUBE 300A O_2 (i)	5
15.	T-8945	120793	Electrode 200A O_2	5
*16.	T-4915*	120793-AG	Electrode, SilverEX-® 200A O_2	5
17.	T-8944	120785	Electrode 100A O_2	5
18.	T-10630	120855 OEM	Electrode 200/400A N_2	5
19.	T-4912	120810-AG	Electrode, SilverEX-® 400A O_2	5
20.	T-4911	120802-AG	Electrode, SilverEX-® 300A O_2	5
21.	T-11143	120651	HT®4400 torch main body (ii)	1
22.	T-11142	120025	Cooling Tube	1
23.	N-10096	1-028B	2× O-Ring	1
24.	N-10098	1-030B	O-Ring	1
25.	Coolant Liquid. Details on the page 144, section Accessories.			

* FULLY INTERCHANGEABLE WITH ORIGINAL PARTS, BUT DIFFERS FROM ORIGINAL DESIGN

(i) THIS PARTS MAY NOT BE DISTRIBUTED ON THE GERMAN, ITALIAN, FRENCH AND GREAT BRITAIN MARKET. THERMACUT ACCEPTS NO RESPONSIBILITY IN CASE OF INDIRECT SALES TO GERMANY, ITALY, FRANCE AND GREAT BRITAIN.

(ii) THIS PART MAY NOT BE DISTRIBUTED ON THE USA AND JAPANESE MARKET. THERMACUT ACCEPTS NO RESPONSIBILITY IN CASE OF INDIRECT SALES TO USA AND JAPAN.

-AG HEAVY DUTY ELECTRODE, OFFERS BETTER LIFETIME

CCW COUNTER CLOCK WISE GAS SWIRLING, USE OF CCW PARTS WILL MAKE CUT ANGLE ON THE OPPOSITE SIDE, THAN WITH STANDARD CLOCK WISE (CW) SWIRLING PARTS.

Last update of this page: 22/06/2016. See Revision history for details.

WWW.THERMACUT.CZ
TEL.: +420 556 423 418
SALES@THERMACUT.CZ

WWW.THERMACUT.DE
TEL.: +49 (0) 27 39 40 33 0
INFO@THERMACUT.DE

WWW.THERMACUT.COM
TEL.: 1-603-542-6715
CUSTOMERSERVICE@THERMACUT.COM

THERMACUT®, FHT-EX® AND EX-TRAFIRE® ARE REGISTERED TRADEMARKS OF THERMACUT, K.S. AND MAY BE REGISTERED IN CZECH REPUBLIC AND/OR OTHER COUNTRIES. ALL OTHER TRADEMARKS ARE PROPERTIES OF THEIR RESPECTIVE OWNERS. THERMACUT IS NO WAY AFFILIATED WITH Hypertherm®.
MOST THERMACUT PARTS ARE MADE FOR OR BY AN IBG COMPANY. PARTS INDICATED WITH A OEM ARE ORIGINAL PARTS MANUFACTURED BY THE ABOVE NAMED MANUFACTURER AND ARE BEING RESOLD BY THERMACUT. THERMACUT RESERVES THE RIGHT TO SUBSTITUTE OEM PARTS IN PLACE OF THERMACUT PARTS.
VALID FROM FEBRUARY 2018 • PREVIOUS VERSION IS NO LONGER VALID. • © COPYRIGHT 2018 BY THERMACUT® CZECH REPUBLIC. ALL RIGHTS RESERVED.

REPLACEMENT PARTS SUITABLE FOR
Hypertherm®
PAC®500
MODEL 500®

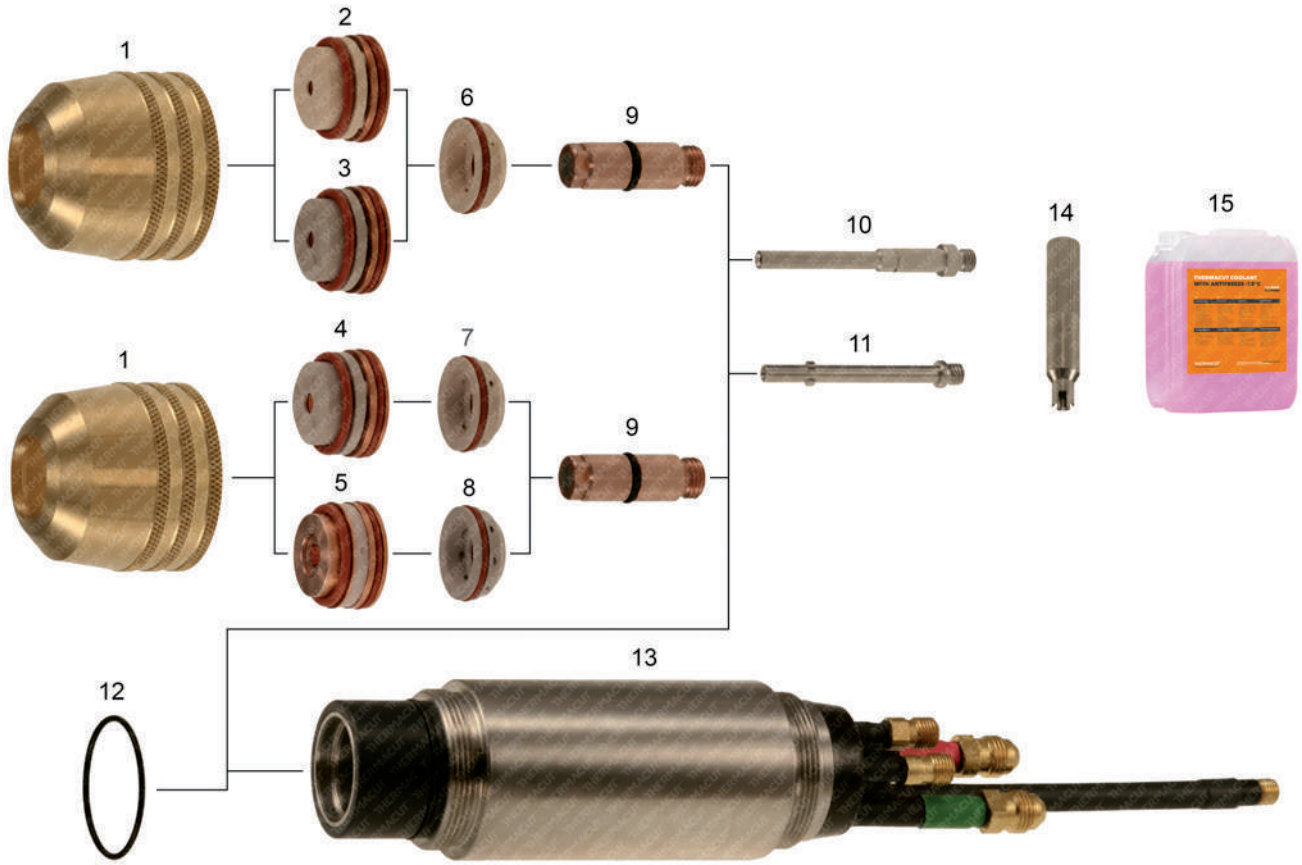

Item	Part No.	Ref. No.	Description	Std. Pkg	Item	Part No.	Ref. No.	Description	Std. Pkg.
1.	T-0014	020034	Cap, Nozzle Retaining, Tapered	1	13.	T-0025	020030	Torch Main Body PAC®500	1
2.	T-0016	020035	Nozzle, .166	1	14.	T-1397	T-1397	Wrench for TMT Water Tube	1
3.	T-0017	020036	Nozzle, .187	1	NS	KT-1214	028139	HT®400, PAC®500 Cable Leads, 6,1m (20')	1
4.	T-0018	020037	Nozzle, .220	1	NS	KT-1154	028140	HT®400, PAC®500 Cable Leads, 7,6m (25')	1
5.	T-0019	020047	Nozzle, .250	1	NS	KT-1157	028141	HT®400, PAC®500 Cable Leads, 9,2m (30')	1
6.	T-0020	020039	Swirl Ring, .120/.166/.187, N_2	1	NS	KT-1153	028142	HT®400, PAC®500 Cable Leads, 10,7m (35')	1
7.	T-0021	020042	Swirl Ring CCW, .166, .187	1	NS	KT-1404	028143	HT®400, PAC®500 Cable Leads, 12,2m (40')	1
8.	T-0022	020040	Swirl Ring, .220	1	NS	KT-1217	K.HT400.15,2M.K	HT®400, PAC®500 Cable Leads, 15,2m (50')	1
	T-0023	020048	Swirl Ring, .250	1	NS	KT-1471	K.PAC500.6,1M	PAC®500 Mach. Torch with Leads 6,1m (20')	
9.	T-0024	020038	Electrode	5	NS	KT-1165	K.PAC500.15,2M	PAC®500 Mach. Torch with Leads 15,2m (50')	1
#10.	T-0598#	120035 OEM	Water Tube (For OEM Torch)	1	NS	KT-1164	K.PAC500.22,9M	PAC®500 Mach. Torch with Leads 22,9m (75')	1
**11.	T-1395**	120035-UR	Water Tube TMT (For TMT Torch)	1	15.	Coolant Liquid. Details on the page 144, section Accessories.			
12.	T-1013	025028	O-Ring	1		Different types of cable leads available on request			

#	COMPATIBLE WITH OEM TORCH ONLY, DOESN'T FIT TO THERMACUT TORCH
**	COMPATIBLE WITH THERMACUT AND OEM TORCH
NS	NOT SHOWN IN THE PICTURE

Last update of this page: 15/02/2018. See Revision history for details.

THERMACUT®, FHT-EX® AND EX-TRAFIRE® ARE REGISTERED TRADEMARKS OF THERMACUT, K.S. AND MAY BE REGISTERED IN CZECH REPUBLIC AND/OR OTHER COUNTRIES. ALL OTHER TRADEMARKS ARE PROPERTIES OF THEIR RESPECTIVE OWNERS. THERMACUT IS NO WAY AFFILIATED WITH Hypertherm®.
MOST THERMACUT PARTS ARE MADE FOR OR BY AN IBG COMPANY. PARTS INDICATED WITH A OEM ARE ORIGINAL PARTS MANUFACTURED BY THE ABOVE NAMED MANUFACTURER AND ARE BEING RESOLD BY THERMACUT. THERMACUT RESERVES THE RIGHT TO SUBSTITUTE OEM PARTS IN PLACE OF THERMACUT PARTS.
VALID FROM FEBRUARY 2018 • PREVIOUS VERSION IS NO LONGER VALID. • © COPYRIGHT 2018 BY THERMACUT® CZECH REPUBLIC. ALL RIGHTS RESERVED.

REPLACEMENT PARTS SUITABLE FOR
Hypertherm®
HD®1070/HD®3070 HyDefinition®
PAC®182/PAC®186/PAC®190

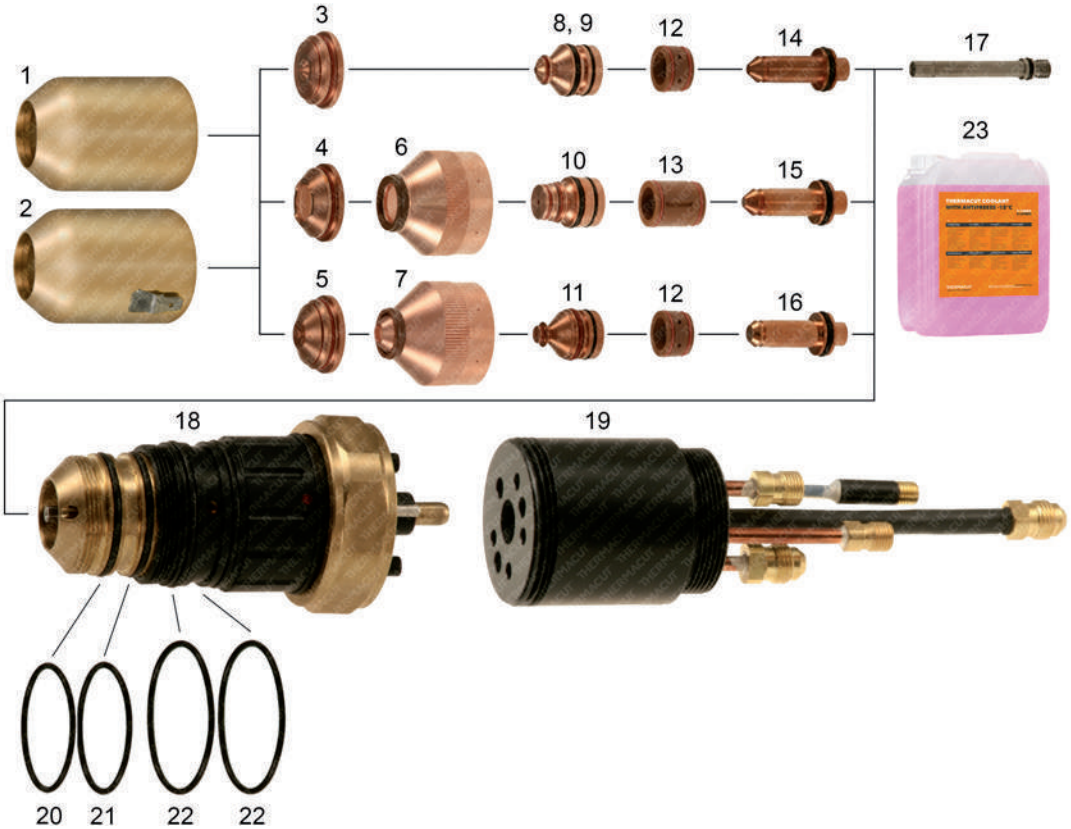

Item	Part No.	Ref. No.	Description	Std. Pkg.	Item	Part No.	Ref. No.	Description	Std. Pkg.
1.	T-8082	020634	Shield Cap Without IHS Tab	1	15.	T-8061	120112	Electrode 70A MS/SS	5
2.	T-2828	020687	Shield Cap With IHS Tab	1	16.	T-8062	120410	Electrode 100A MS	5
3.	T-8046	020671	Shield 30–50A MS	10	17.	T-8100	120377	Tube, Water Electrode Cooling, PAC®186	1
4.	T-8047	020796	Shield 70A MS/SS	10	18.	T-8063	120349	Torch Main Body, PAC®186	1
5.	T-8048	120273	Shield 100A MS	10	19.	T-8094	028855	Assy, PAC®185/PAC®186, Straight Quick Disconnect	1
6.	T-8050	020795	Inner Retaining Cap 50–70A MS, SS	1	NS	T-10628	T-10628	O-Ring Set For OEM Version	1
7.	T-8051	120266	Inner Retaining Cap 100A MS	1	20.	T-8095	044025	O-Ring	1
8.	T-8053	020645	Nozzle 30A MS	1	21.	T-4028	044026	O-Ring	1
9.	T-8054	020646	Nozzle 50A MS	5	22.	T-4029	044507	O-Ring	1
10.	T-8055	020647	Nozzle 70A MS, SS	5	NS	KT-1073	028499	PAC®186 Cable Leads, 6,1m (20')	1
11.	T-8056	120272	Nozzle 100A MS	5	NS	KT-1329	028500	PAC®186 Cable Leads, 7,6m (25')	1
12.	T-8057	020637	Swirl Ring 15–100A MS	1	NS	KT-1252	028870	PAC®186 Cable Leads, 12,2m (40')	1
13.	T-8058	020789	Swirl Ring 70A MS/SS	2	23.	Coolant Liquid. Details on the page 144, section Accessories.			
14.	T-8060	120111	Electrode 15–30A	5	Different types of cable leads available on request				

NS NOT SHOWN IN THE PICTURE
MS MILD STEEL
SS STAINLESS STEEL

Last update of this page: 15/02/2018. See Revision history for details.

THERMACUT®, FHT-EX® AND EX-TRAFIRE® ARE REGISTERED TRADEMARKS OF THERMACUT, K.S. AND MAY BE REGISTERED IN CZECH REPUBLIC AND/OR OTHER COUNTRIES. ALL OTHER TRADEMARKS ARE PROPERTIES OF THEIR RESPECTIVE OWNERS. THERMACUT IS NO WAY AFFILIATED WITH Hypertherm®.
MOST THERMACUT PARTS ARE MADE FOR OR BY AN IBG COMPANY. PARTS INDICATED WITH A OEM ARE ORIGINAL PARTS MANUFACTURED BY THE ABOVE NAMED MANUFACTURER AND ARE BEING RESOLD BY THERMACUT. THERMACUT RESERVES THE RIGHT TO SUBSTITUTE OEM PARTS IN PLACE OF THERMACUT PARTS.
VALID FROM FEBRUARY 2018 • PREVIOUS VERSION IS NO LONGER VALID. • © COPYRIGHT 2018 BY THERMACUT® CZECH REPUBLIC. ALL RIGHTS RESERVED.

REPLACEMENT PARTS SUITABLE FOR
Hypertherm®

HyPerformance® Plasma
HPR®130/HPR®260 mild steel

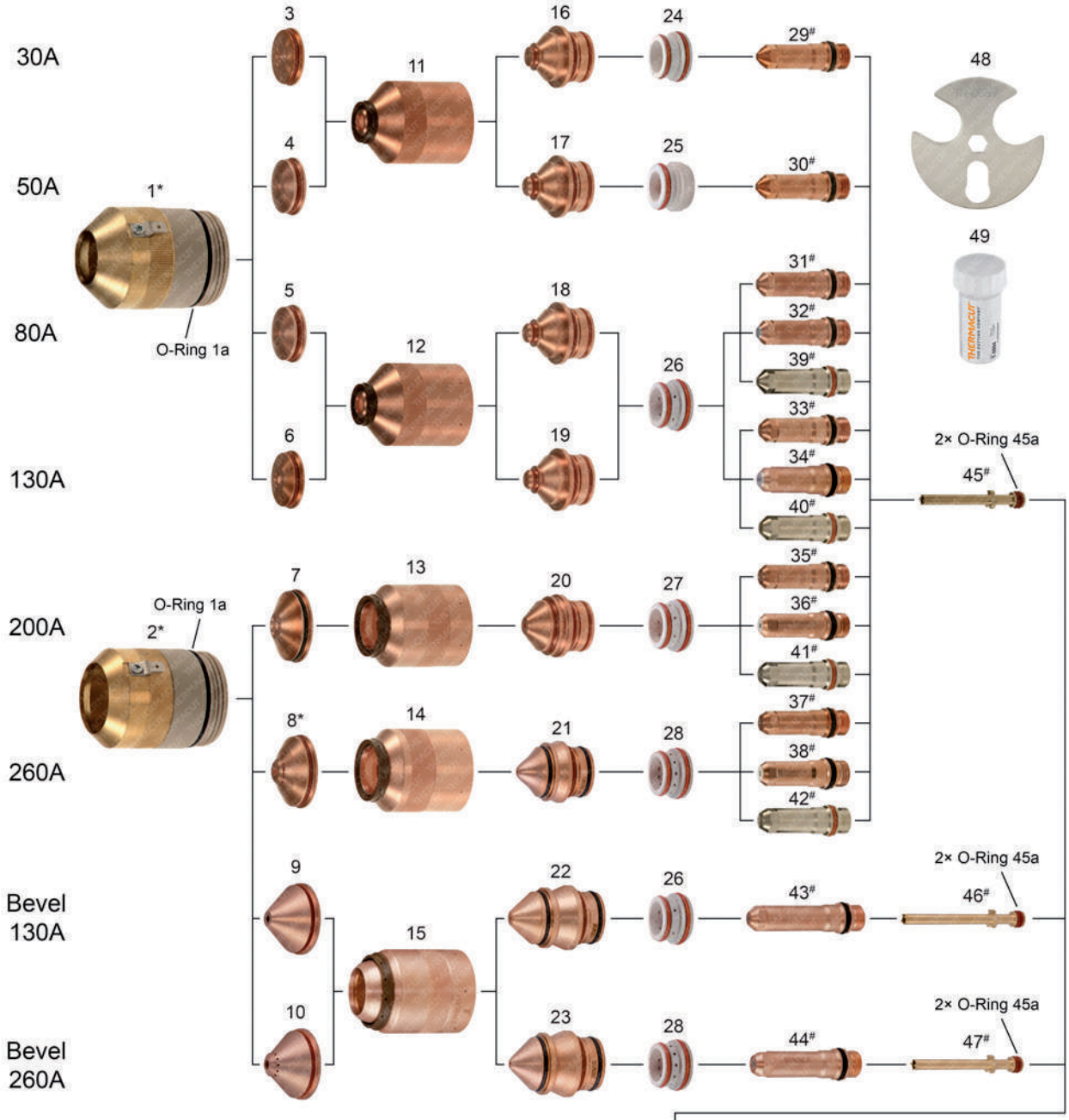

52

51

50

Torch, cable leads. See following pages for details.

Last update of this page: 15/02/2018. See Revision history for details.

THERMACUT®, FHT-EX® AND EX-TRAFIRE® ARE REGISTERED TRADEMARKS OF THERMACUT, K.S. AND MAY BE REGISTERED IN CZECH REPUBLIC AND/OR OTHER COUNTRIES. ALL OTHER TRADEMARKS ARE PROPERTIES OF THEIR RESPECTIVE OWNERS. THERMACUT IS NO WAY AFFILIATED WITH Hypertherm®.
MOST THERMACUT PARTS ARE MADE FOR OR BY AN IBG COMPANY. PARTS INDICATED WITH A OEM ARE ORIGINAL PARTS MANUFACTURED BY THE ABOVE NAMED MANUFACTURER AND ARE BEING RESOLD BY THERMACUT. THERMACUT RESERVES THE RIGHT TO SUBSTITUTE OEM PARTS IN PLACE OF THERMACUT PARTS.
VALID FROM FEBRUARY 2018 • PREVIOUS VERSION IS NO LONGER VALID. • © COPYRIGHT 2018 BY THERMACUT® CZECH REPUBLIC. ALL RIGHTS RESERVED.

REPLACEMENT PARTS SUITABLE FOR
Hypertherm®

HyPerformance® Plasma
HPR®130/HPR®260 mild steel

PRODUCT BROCHURE WITH DETAILS AT
WWW.THERMACUT.COM

Item	Part No.	Ref. No.	Description	Std. Pkg.	Item	Part No.	Ref. No.	Description	Std. Pkg.
*1.	T-9961*	220173-UR	Shield Cap 30–130A	1	23.	T-10308##	220542-UR	Nozzle 260A, Bevel	1
1a.	N-10099	1-031B	O-Ring	1		T-10939	220542	Nozzle 260A, Bevel	1
*2.	T-9964*	220398-UR	Shield Cap 200/260A (130/260A, Bevel)	1	24.	T-10297	220180	Swirl Ring 30A	1
3.	T-10878	220194	Shield 30A	10	25.	T-10305	220553	Swirl Ring 50A	1
4.	T-10882	220555	Shield 50A	10	26.	T-10295	220179	Swirl Ring 80/130 (130A, Bevel)	1
5.	T-9838	220189	Shield 80A	10	27.	T-10296	220353	Swirl Ring 200A	1
6.	T-9839	220183	Shield 130A	10	28.	T-10271	220436	Swirl Ring 260A (260A, Bevel)	1
7.	T-9965	220356	Shield 200A	1	#29.	T-9894#	220192-UR	Electrode 30A	5
**8.	T-9970**	220440-UR	Shield 260A	1	#30.	T-10306#	220552-UR	Electrode 50A	5
9.	T-10311	220645	Shield 130A, Bevel	1	#31.	T-9895#	220187-UR	Electrode 80A	5
10.	T-10881	220545	Shield 260A, Bevel	1	#32.	T-12064#	220187-PRO	Electrode, Silver PRO 80A(=420566)	5
11.	T-11146	220313	Inner Retaining Cap 30/50A	1	#33.	T-9920#	220181-UR	Electrode 130A	5
12.	T-11144	220176	Inner Retaining Cap 80/130A	1	#34.	T-11203#	220181-PRO	Electrode, Silver PRO 130A(=220665-PRO)	5
13.	T-11149	220355	Inner Retaining Cap 200A	1	#35.	T-9969#	220352-UR	Electrode 200A	5
14.	T-11150	220433	Inner Retaining Cap 260A	1	#36.	T-11200#	220352-PRO	Electrode, Silver PRO 200A(=220666-PRO)	5
15.	T-11151	220603	Inner Retaining Cap 130A/260A, Bevel	1	#37.	T-9974#	220435-UR	Electrode 260A	5
16.	T-9834##	220193-UR	Nozzle 30A	1	#38.	T-11197#	220435-PRO	Electrode, Silver PRO 260A(=220668-PRO)	5
	T-10936	220193	Nozzle 30A	1	#39.	T-4927#	220187-AG	Electrode, SilverEX-® 80A	5
17.	T-10313##	220554-UR	Nozzle 50A	1	#40.	T-4917#	220181-AG	Electrode, SilverEX-® 130A	5
	T-10940	220554	Nozzle 50A	1	#41.	T-4925#	220352-AG	Electrode, SilverEX-® 200A	5
18.	T-9835##	220188-UR	Nozzle 80A	1	#42.	T-4926#	220435-AG	Electrode, SilverEX-® 260A	5
	T-10935	220188	Nozzle 80A	1	#43.	T-10309#	220649-UR	Electrode 130A, Bevel	5
19.	T-9836##	220182-UR	Nozzle 130A	1	#44.	T-10307#	220541-UR	Electrode 260A, Bevel	5
	T-10934	220182	Nozzle 130A	1	#45.	T-9882#	220340-UR	Cooling Tube 30–260A	1
NS	T-10248	220510-UR	Nozzle 100A, HD®3070 upgrade	1	45a.	T-13016	026009	O-Ring	1
NS	T-11265	220510	Nozzle 100A, HD®3070 upgrade	1	#46.	T-10472#	220700-UR	Cooling Tube 80–130A, Bevel	1
20.	T-9967##	220354-UR	Nozzle 200A	1	#47.	T-10323#	220571-UR	Cooling Tube 400A (260–400A, Bevel)	1
	T-10937	220354	Nozzle 200A	1	*48.	TN-0069*	104119-UR	Consumables Removal Tool	1
21.	T-9972##	220439-UR	Nozzle 260A	1	49.	T-0994	T-0994	Silicone Lubricant 25ml	1
	T-10938	220439	Nozzle 260A	1	50.	Torch, cable leads. See following pages for details.			
22.	T-10310##	220646-UR	Nozzle 130A, Bevel	1	51.	Consumable Case. Details on the page 148, section Accessories.			
	T-10941	220646	Nozzle 130A, Bevel	1	52.	Coolant Liquid. Details on the page 144, section Accessories.			

* FULLY INTERCHANGEABLE WITH ORIGINAL PARTS, BUT DIFFERS FROM ORIGINAL DESIGN

\# THERMACUT ELECTRODES HAS TO BE USED WITH THERMACUT DESIGN COOLING TUBE, OTHERWISE IT DOESN'T FIT TO THE TORCH, THERMACUT COOLING TUBE CAN BE USED FOR THERMACUT DESIGN ELECTRODES AND FOR ORIGINAL DESIGN TOO

** SHIELD OFFERS BETTER LIFETIME BECAUSE OF IMPROVED DESIGN AND IS FULLY INTERCHANGEABLE AND COMPATIBLE WITH ORIGINAL PARTS

NOZZLES -UR IN SOME CASES CAN REQUIRE DECREASE OF GAS FLOW, OFFERS SAVINGS OF THE COSTS FOR OXYGEN

NS NOT SHOWN IN THE PICTURE

-PRO SILVER PRO TECHNOLOGY INCREASES ELECTRODE LIFETIME SIGNIFICANTLY COMPARED TO STANDARD COPPER ELECTRODES SMART SOLUTION – DESIGN IMPROVEMENTS THAT BRINGS ADDED VALUE SUCH AS IMPROVED LIFETIME OF CONSUMABLES, EXCELLENT CUT QUALITY, SPEED OR BETTER COST EFFECTIVENESS OF YOUR SYSTEM

Last update of this page: 15/02/2018. See Revision history for details.

THERMACUT®
THE CUTTING COMPANY®

WWW.THERMACUT.CZ
TEL.: +420 556 423 418
SALES@THERMACUT.CZ

WWW.THERMACUT.DE
TEL.: +49 (0) 27 39 40 33 0
INFO@THERMACUT.DE

WWW.THERMACUT.COM
TEL.: 1-603-542-6715
CUSTOMERSERVICE@THERMACUT.COM

THERMACUT®, FHT-EX® AND EX-TRAFIRE® ARE REGISTERED TRADEMARKS OF THERMACUT, K.S. AND MAY BE REGISTERED IN CZECH REPUBLIC AND/OR OTHER COUNTRIES. ALL OTHER TRADEMARKS ARE PROPERTIES OF THEIR RESPECTIVE OWNERS. THERMACUT IS NO WAY AFFILIATED WITH Hypertherm®.
MOST THERMACUT PARTS ARE MADE FOR OR BY AN IBG COMPANY. PARTS INDICATED WITH A OEM ARE ORIGINAL PARTS MANUFACTURED BY THE ABOVE NAMED MANUFACTURER AND ARE BEING RESOLD BY THERMACUT. THERMACUT RESERVES THE RIGHT TO SUBSTITUTE OEM PARTS IN PLACE OF THERMACUT PARTS.
VALID FROM FEBRUARY 2018 • PREVIOUS VERSION IS NO LONGER VALID. • © COPYRIGHT 2018 BY THERMACUT® CZECH REPUBLIC. ALL RIGHTS RESERVED.

REPLACEMENT PARTS SUITABLE FOR
Hypertherm®

HyPerformance® Plasma
HPR®130/HPR®260 stainless steel

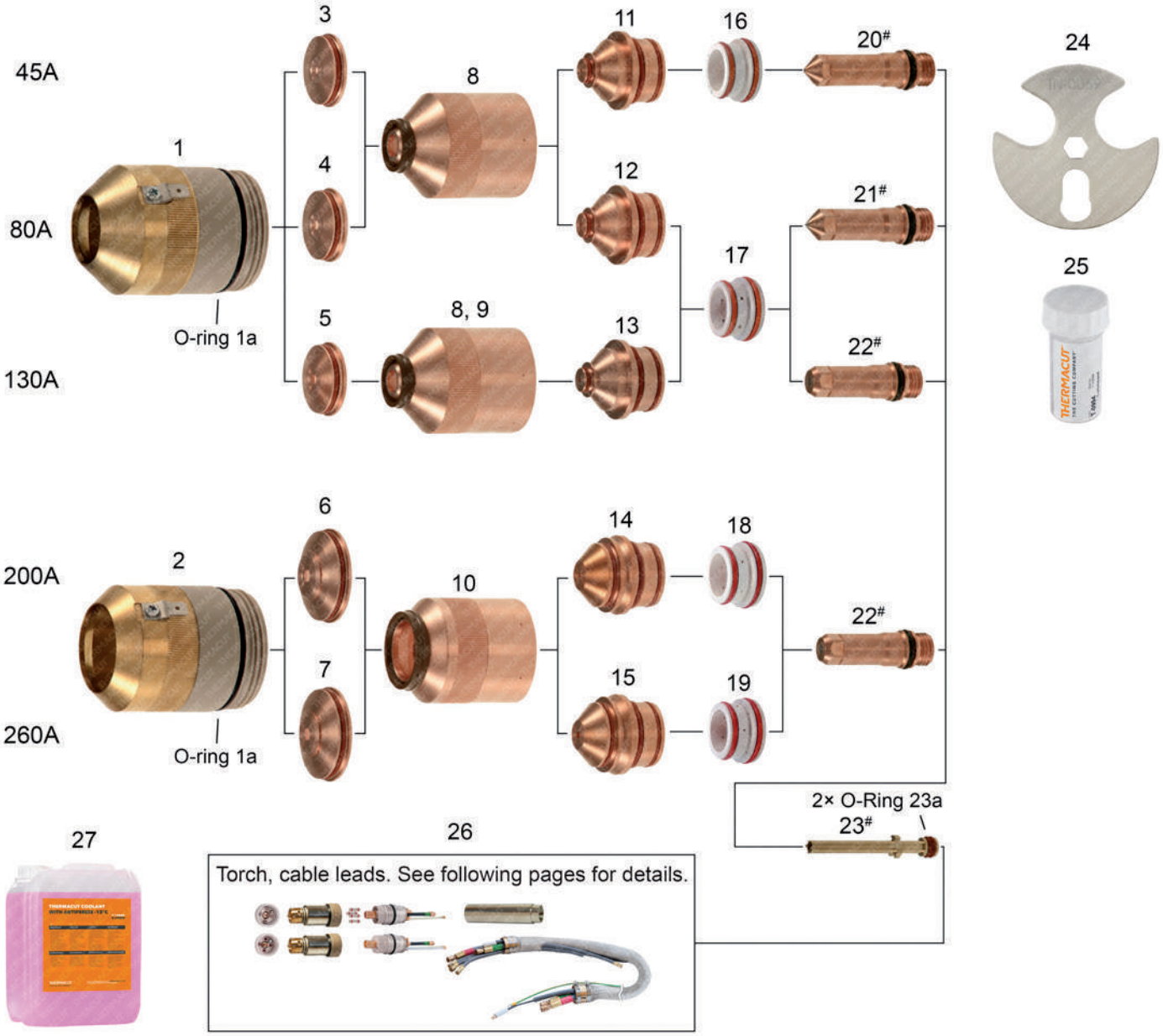

Last update of this page: 31/01/2017. See Revision history for details.

THERMACUT®
THE CUTTING COMPANY

WWW.THERMACUT.CZ
TEL.: +420 556 423 418
SALES@THERMACUT.CZ

WWW.THERMACUT.DE
TEL.: +49 (0) 27 39 40 33 0
INFO@THERMACUT.DE

WWW.THERMACUT.COM
TEL.: 1-603-542-6715
CUSTOMERSERVICE@THERMACUT.COM

THERMACUT®, FHT-EX® AND EX-TRAFIRE® ARE REGISTERED TRADEMARKS OF THERMACUT, K.S. AND MAY BE REGISTERED IN CZECH REPUBLIC AND/OR OTHER COUNTRIES. ALL OTHER TRADEMARKS ARE PROPERTIES OF THEIR RESPECTIVE OWNERS. THERMACUT IS NO WAY AFFILIATED WITH Hypertherm®.
MOST THERMACUT PARTS ARE MADE FOR OR BY AN IBG COMPANY. PARTS INDICATED WITH A OEM ARE ORIGINAL PARTS MANUFACTURED BY THE ABOVE NAMED MANUFACTURER AND ARE BEING RESOLD BY THERMACUT. THERMACUT RESERVES THE RIGHT TO SUBSTITUTE OEM PARTS IN PLACE OF THERMACUT PARTS.
VALID FROM FEBRUARY 2018 • PREVIOUS VERSION IS NO LONGER VALID. • © COPYRIGHT 2018 BY THERMACUT® CZECH REPUBLIC. ALL RIGHTS RESERVED.

Item	Part No.	Ref. No.	Description	Std. Pkg.
*1.	T-9961*	220173-UR	Shield Cap 45–130A	1
*2.	T-9964*	220398-UR	Shield Cap 200/260A (130/260A Bevel)	1
3.	T-9975	220202	Shield 45A	10
4.	T-9979	220338	Shield 80A	10
5.	T-9982	220198	Shield 130A	10
6.	T-10879	220345	Shield 200A	1
7.	T-10880	220407	Shield 260A	1
8.	T-11145	220304	Inner Retaining Cap 45A/80A/130A	1
9.	T-11144	220176	Inner Retaining Cap 130A (N_2)	1
10.	T-11147	220344	Inner Retaining Cap 200A/260A	1
11.	T-9977	220201	Nozzle 45A	1
12.	T-9980	220337	Nozzle 80A	5
13.	T-9983	220197	Nozzle 130A	5
14.	T-9987	220343	Nozzle 200A	1
15.	T-9990	220406	Nozzle 260A	1

Item	Part No.	Ref. No.	Description	Std. Pkg.
16.	T-10297	220180	Swirl Ring 45A	1
17.	T-10295	220179	Swirl Ring 80A/130A (130A Bevel)	1
18.	T-10579	220342	Swirl Ring 200A	1
19.	T-10596	220405	Swirl Ring 260A (260A Bevel)	1
#20.	T-9978#	220308-UR	Electrode 45A	5
#21.	T-9981#	220339-UR	Electrode 80A	5
#22.	T-9984#	220307-UR	Electrode 130A/200A/260A	5
#23.	T-9882#	220340-UR	Cooling Tube 30–260A	1
23a.	N-10055	1-009S	O-Ring	1
*24.	TN-0069*	104119-UR	Consumables Removal Tool	1
1a.	N-10099	1-031B	O-Ring	1
25.	T-0994	T-0994	Silicone Lubricant 25ml	1
26.	Torch, cable leads. See following pages for details.			
27.	Coolant Liquid. Details on the page 144, section Accessories.			

* FULLY INTERCHANGEABLE WITH ORIGINAL PARTS, BUT DIFFERS FROM ORIGINAL DESIGN

\# THERMACUT ELECTRODES HAS TO BE USED WITH THERMACUT DESIGN COOLING TUBE, OTHERWISE IT DOESN'T FIT TO THE TORCH, THERMACUT COOLING TUBE CAN BE USED FOR THERMACUT DESIGN ELECTRODES AND FOR ORIGINAL DESIGN TOO

SMART SOLUTION – DESIGN IMPROVEMENTS THAT BRINGS ADDED VALUE SUCH AS IMPROVED LIFETIME OF CONSUMABLES, EXCELLENT CUT QUALITY, SPEED OR BETTER COST EFFECTIVENESS OF YOUR SYSTEM

Last update of this page: 31/01/2017. See Revision history for details.

WWW.THERMACUT.CZ
TEL.: +420 556 423 418
SALES@THERMACUT.CZ

WWW.THERMACUT.DE
TEL.: +49 (0) 27 39 40 33 0
INFO@THERMACUT.DE

WWW.THERMACUT.COM
TEL.: 1-603-542-6715
CUSTOMERSERVICE@THERMACUT.COM

THERMACUT®, FHT-EX® AND EX-TRAFIRE® ARE REGISTERED TRADEMARKS OF THERMACUT, K.S. AND MAY BE REGISTERED IN CZECH REPUBLIC AND/OR OTHER COUNTRIES. ALL OTHER TRADEMARKS ARE PROPERTIES OF THEIR RESPECTIVE OWNERS. THERMACUT IS NO WAY AFFILIATED WITH Hypertherm®.
MOST THERMACUT PARTS ARE MADE FOR OR BY AN IBG COMPANY. PARTS INDICATED WITH A OEM ARE ORIGINAL PARTS MANUFACTURED BY THE ABOVE NAMED MANUFACTURER AND ARE BEING RESOLD BY THERMACUT. THERMACUT RESERVES THE RIGHT TO SUBSTITUTE OEM PARTS IN PLACE OF THERMACUT PARTS.
VALID FROM FEBRUARY 2018 • PREVIOUS VERSION IS NO LONGER VALID. • © COPYRIGHT 2018 BY THERMACUT® CZECH REPUBLIC. ALL RIGHTS RESERVED.

Hypertherm®

HyPerformance® Plasma
HPR®130/HPR®260 aluminium

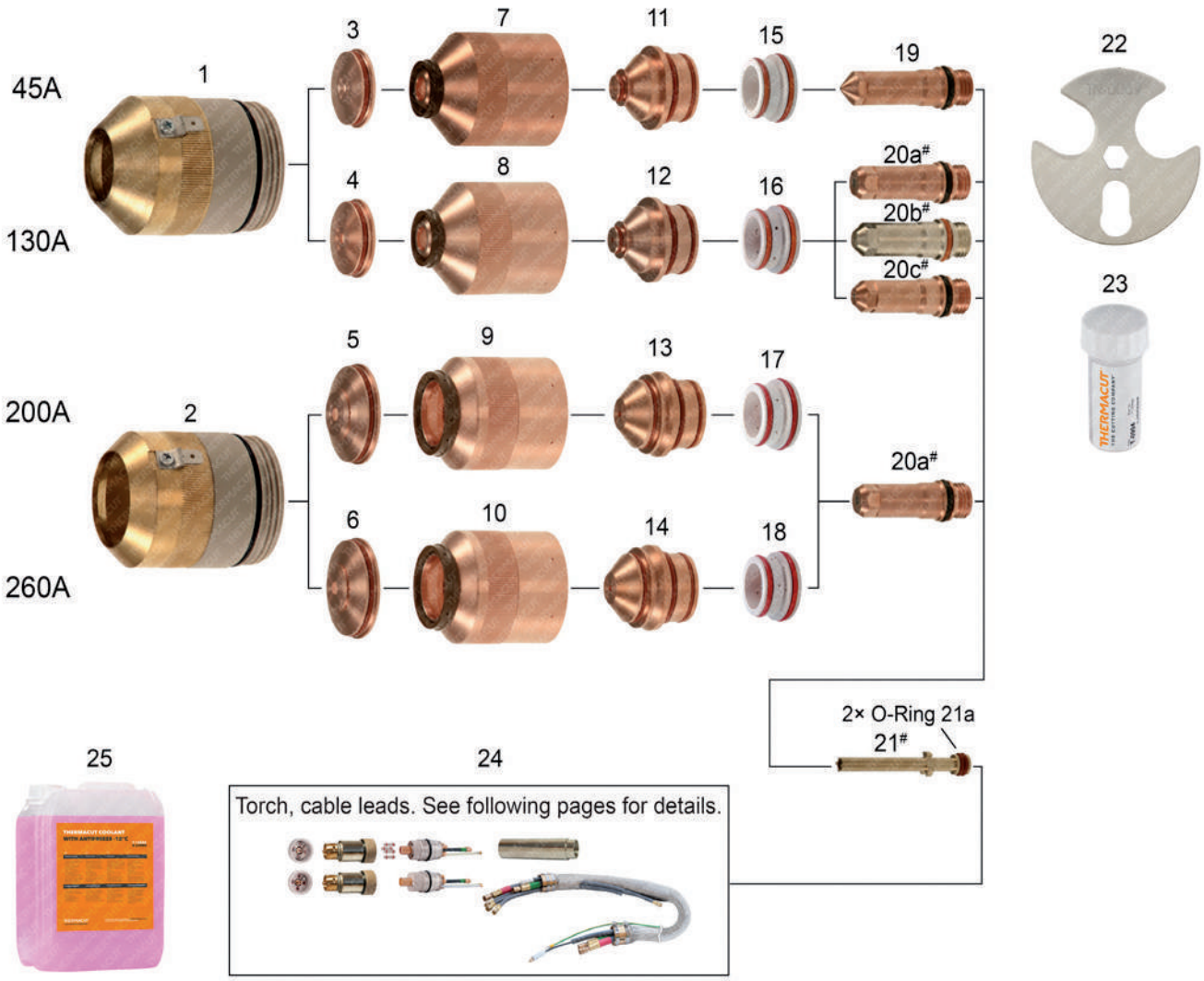

Last update of this page: 31/01/2017. See Revision history for details.

THERMACUT®, FHT-EX® AND EX-TRAFIRE® ARE REGISTERED TRADEMARKS OF THERMACUT, K.S. AND MAY BE REGISTERED IN CZECH REPUBLIC AND/OR OTHER COUNTRIES. ALL OTHER TRADEMARKS ARE PROPERTIES OF THEIR RESPECTIVE OWNERS. THERMACUT IS NO WAY AFFILIATED WITH Hypertherm®.
MOST THERMACUT PARTS ARE MADE FOR OR BY AN IBG COMPANY. PARTS INDICATED WITH A OEM ARE ORIGINAL PARTS MANUFACTURED BY THE ABOVE NAMED MANUFACTURER AND ARE BEING RESOLD BY THERMACUT. THERMACUT RESERVES THE RIGHT TO SUBSTITUTE OEM PARTS IN PLACE OF THERMACUT PARTS.
VALID FROM FEBRUARY 2018 • PREVIOUS VERSION IS NO LONGER VALID. • © COPYRIGHT 2018 BY THERMACUT® CZECH REPUBLIC. ALL RIGHTS RESERVED.

Item	Part No.	Ref. No.	Description	Std. Pkg.	Item	Part No.	Ref. No.	Description	Std. Pkg.
*1.	T-9961*	220173-UR	Shield Cap 45–130A	1	15.	T-10297	220180	Swirl Ring 45A	1
*2.	T-9964*	220398-UR	Shield Cap 200/260A	1	16.	T-10295	220179	Swirl Ring 130A	1
3.	T-9975	220202	Shield 45A	10	17.	T-10579	220342	Swirl Ring 200A	1
4.	T-9982	220198	Shield 130A	10	18.	T-10596	220405	Swirl Ring 260A	1
5.	T-10879	220345	Shield 200A	1	#19.	T-9978#	220308-UR	Electrode 45A	5
6.	T-10880	220407	Shield 260A	1	#20c	T-9920#	220181-UR	Electrode 130A	5
7.,8.	T-11144	220176	Inner Retaining Cap 45A/130A	1	#20b	T-4917#	220181-AG	Electrode, SilverEX-® 130A	5
8.	T-11145	220304	Inner Retaining Cap 130A	1	#20a	T-9984#	220307-UR	Electrode 130A/200A/260A	5
9.	T-11148	220347	Inner Retaining Cap 200A	1	#21.	T-9882#	220340-UR	Cooling Tube 30–260A	1
10.	T-11147	220344	Inner Retaining Cap 260A	1	21a.	N-10055	1-009S	O-Ring	1
11.	T-9977	220201	Nozzle 45A	1	*22.	TN-0069*	104119-UR	Consumables Removal Tool	1
12.	T-9983	220197	Nozzle 130A	5	23.	T-0994	T-0994	Silicone Lubricant 25ml	1
13.	T-9993	220346	Nozzle 200A	1	24.	Torch, cable leads. See following pages for details.			
14.	T-9990	220406	Nozzle 260A	1	25.	Coolant Liquid. Details on the page 144, section Accessories.			

* FULLY INTERCHANGEABLE WITH ORIGINAL PARTS, BUT DIFFERS FROM ORIGINAL DESIGN

\# THERMACUT ELECTRODES HAS TO BE USED WITH THERMACUT DESIGN COOLING TUBE, OTHERWISE IT DOESN'T FIT TO THE TORCH, THERMACUT COOLING TUBE CAN BE USED FOR THERMACUT DESIGN ELECTRODES AND FOR ORIGINAL DESIGN TOO SMART SOLUTION – DESIGN IMPROVEMENTS THAT BRINGS ADDED VALUE SUCH AS IMPROVED LIFETIME OF CONSUMABLES, EXCELLENT CUT QUALITY, SPEED OR BETTER COST EFFECTIVENESS OF YOUR SYSTEM

Last update of this page: 31/01/2017. See Revision history for details.

WWW.THERMACUT.CZ
TEL.: +420 556 423 418
SALES@THERMACUT.CZ

WWW.THERMACUT.DE
TEL.: +49 (0) 27 39 40 33 0
INFO@THERMACUT.DE

WWW.THERMACUT.COM
TEL.: 1-603-542-6715
CUSTOMERSERVICE@THERMACUT.COM

THERMACUT®, FHT-EX® AND EX-TRAFIRE® ARE REGISTERED TRADEMARKS OF THERMACUT, K.S. AND MAY BE REGISTERED IN CZECH REPUBLIC AND/OR OTHER COUNTRIES. ALL OTHER TRADEMARKS ARE PROPERTIES OF THEIR RESPECTIVE OWNERS. THERMACUT IS NO WAY AFFILIATED WITH Hypertherm®.
MOST THERMACUT PARTS ARE MADE FOR OR BY AN IBG COMPANY. PARTS INDICATED WITH A OEM ARE ORIGINAL PARTS MANUFACTURED BY THE ABOVE NAMED MANUFACTURER AND ARE BEING RESOLD BY THERMACUT. THERMACUT RESERVES THE RIGHT TO SUBSTITUTE OEM PARTS IN PLACE OF THERMACUT PARTS.
VALID FROM FEBRUARY 2018 • PREVIOUS VERSION IS NO LONGER VALID. • © COPYRIGHT 2018 BY THERMACUT® CZECH REPUBLIC. ALL RIGHTS RESERVED.

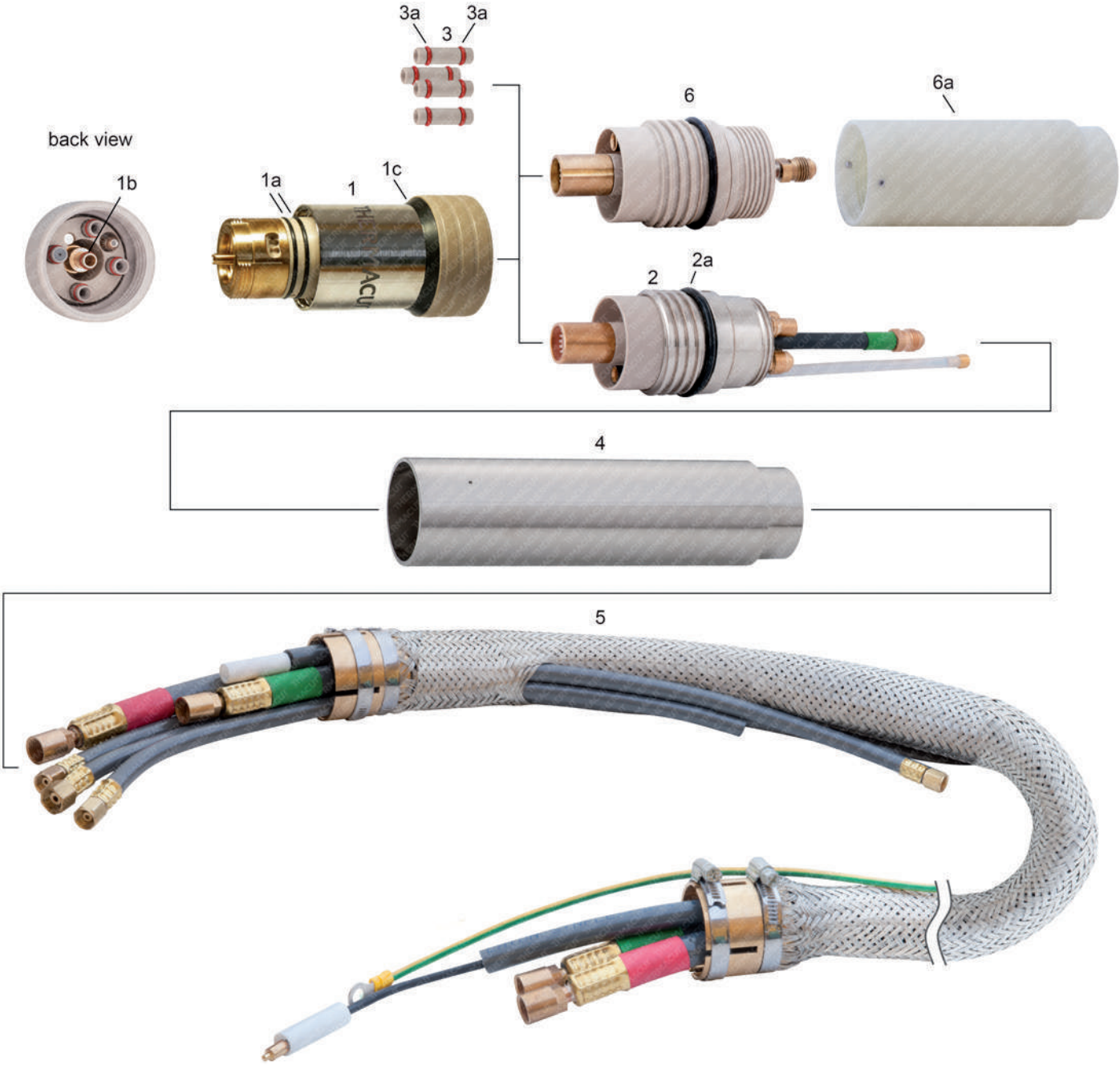

Last update of this page: 15/02/2018. See Revision history for details.

THERMACUT®, FHT-EX® AND EX-TRAFIRE® ARE REGISTERED TRADEMARKS OF THERMACUT, K.S. AND MAY BE REGISTERED IN CZECH REPUBLIC AND/OR OTHER COUNTRIES. ALL OTHER TRADEMARKS ARE PROPERTIES OF THEIR RESPECTIVE OWNERS. THERMACUT IS NO WAY AFFILIATED WITH Hypertherm®.
MOST THERMACUT PARTS ARE MADE FOR OR BY AN IBG COMPANY. PARTS INDICATED WITH A OEM ARE ORIGINAL PARTS MANUFACTURED BY THE ABOVE NAMED MANUFACTURER AND ARE BEING RESOLD BY THERMACUT. THERMACUT RESERVES THE RIGHT TO SUBSTITUTE OEM PARTS IN PLACE OF THERMACUT PARTS.
VALID FROM FEBRUARY 2018 • PREVIOUS VERSION IS NO LONGER VALID. • © COPYRIGHT 2018 BY THERMACUT® CZECH REPUBLIC. ALL RIGHTS RESERVED.

REPLACEMENT PARTS SUITABLE FOR
Hypertherm®
HPR®130/HPR®260
Torches and Cable leads

Item	Part No.	Ref. No.	Description	Std. Pkg.
1., 3.	T-11137	220162	Torch Q. D. Orig. design (incl. item 3 – 4 pcs; included 2pcs cooling tube 220340-UR)	1
1a.	N-10096	1-028B	O-Ring	1
1b.	N-10054	1-008S	O-Ring	1
1c.	N-18157	N-18157	Conical Sealing	1
2.	T-11138	220163	Receptacle Q. D. Original design	1
2a.	N-18108	O-KR-45x3,5B	O-Ring	1
3.	T-11769	T-11769	Connector Tube HPR® with O-Rings	1
3a.	N-10055	1-009S	O-Ring	1
4.	T-10492	220232	Mounting Tube	1
5.	KT-1108	128986	Cable Leads 2m (6ft)	1
	KT-1397	128935	Cable Leads 3m (10ft)	1
	KT-1117	128934	Cable Leads 4,5m (15ft)	1
	KT-1052	128784	Cable Leads 7,5m (25ft)	1
	KT-1126	128987	Cable Leads 10m (35ft)	1

Item	Part No.	Ref. No.	Description	Std. Pkg.
	KT-1106	128785	Cable Leads 15m (50ft)	1
	KT-1269	K.HPR130.18M.K	Cable Leads 18m (59ft)	1
	KT-1150	128988	Cable Leads 20m (65ft)	1
	KT-1270	K.HPR130.21M.K	Cable Leads 21m (69ft)	1
!!!	KT-1245	DEMO_HPR130	Torch + cable leads 0,8m, for exhibition only,inoperative!	1
1,2,3,4,5	KT-1331	K.HPR130.7,5M	Torch with Leads 7,5m (25ft)	1
	KT-1421	K.HPR130.20M	Torch with Leads 20m (65ft)	1
1a, 1b, 1c, 3, 3a	T-11864	128879	Set of spare parts for 220162, contains items 3 (4pcs), 3a (8pcs), 1a (2pcs), 1b (1pc), 1c (1pc), 2a (1pc), cooling tube 220340-UR, silicon lubricant T-0994	1
##6.	T-11409##	220573	Receptacle Q.D., Bevel	1
##6a.	T-11410##	220546	Torch mounting sleeve, Bevel	1

RECEPTACLE Q.D., BEVEL POS. 8 IS NOT COMPATIBLE WITH STANDARD CABLE LEADS POS. 7
!!! DEMO IS INOPERATIVE, FOR EXHIBITION PURPOSES ONLY!
Q.D. QUICK DISCONNECT
ALL PARTS ARE WITH O-RINGS

Last update of this page: 15/02/2018. See Revision history for details.

THERMACUT®, FHT-EX® AND EX-TRAFIRE® ARE REGISTERED TRADEMARKS OF THERMACUT, K.S. AND MAY BE REGISTERED IN CZECH REPUBLIC AND/OR OTHER COUNTRIES. ALL OTHER TRADEMARKS ARE PROPERTIES OF THEIR RESPECTIVE OWNERS. THERMACUT IS NO WAY AFFILIATED WITH Hypertherm®.
MOST THERMACUT PARTS ARE MADE FOR OR BY AN IBG COMPANY. PARTS INDICATED WITH A OEM ARE ORIGINAL PARTS MANUFACTURED BY THE ABOVE NAMED MANUFACTURER AND ARE BEING RESOLD BY THERMACUT. THERMACUT RESERVES THE RIGHT TO SUBSTITUTE OEM PARTS IN PLACE OF THERMACUT PARTS.
VALID FROM FEBRUARY 2018 • PREVIOUS VERSION IS NO LONGER VALID. • © COPYRIGHT 2018 BY THERMACUT® CZECH REPUBLIC. ALL RIGHTS RESERVED.

REPLACEMENT PARTS SUITABLE FOR
Hypertherm®

HyPerformance® Plasma
HPR®130XD/HPR®260XD/HPR®400XD mild steel

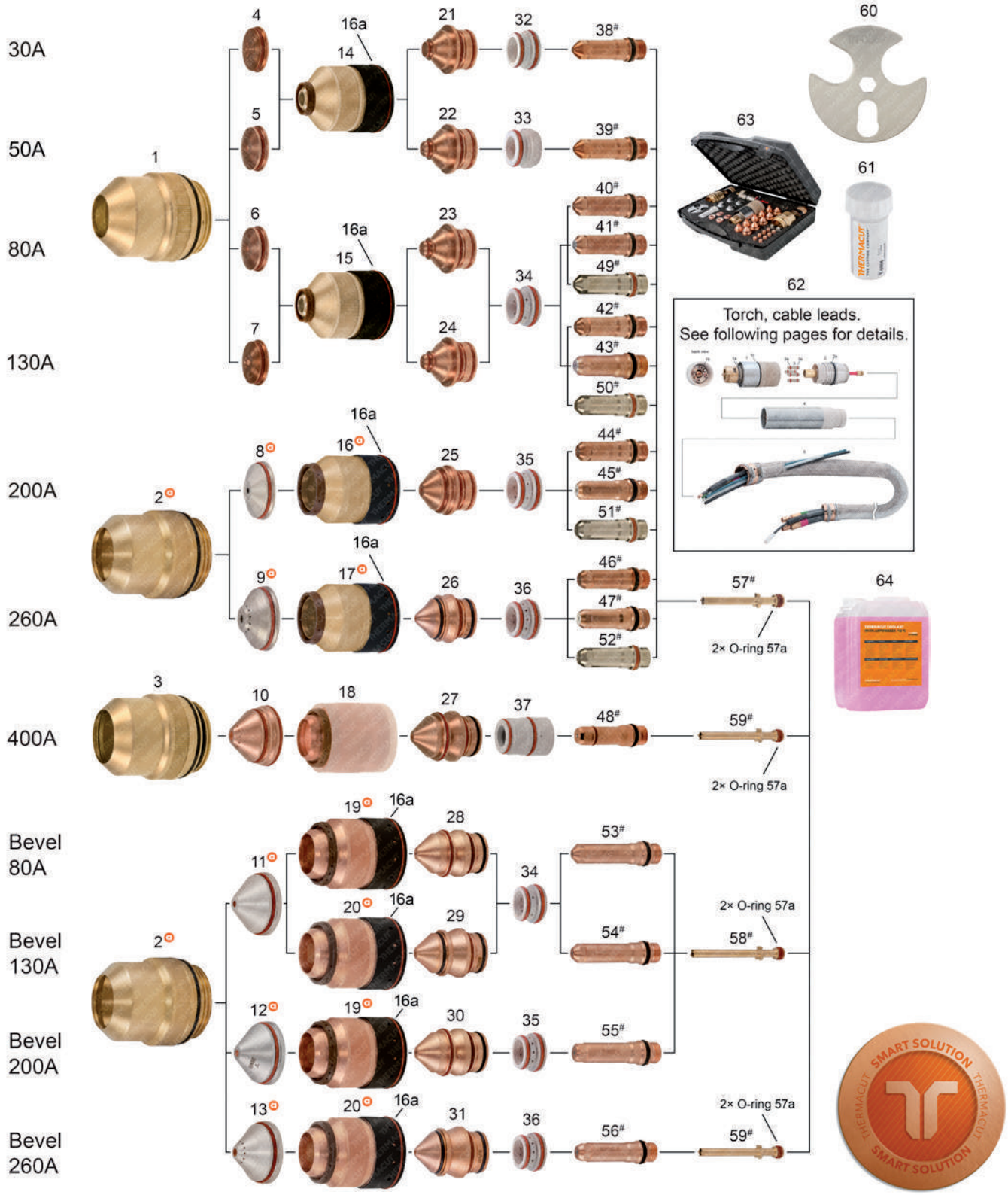

Last update of this page: 15/02/2018. See Revision history for details.

THERMACUT®
THE CUTTING COMPANY

WWW.THERMACUT.CZ
TEL.: +420 556 423 418
SALES@THERMACUT.CZ

WWW.THERMACUT.DE
TEL.: +49 (0) 27 39 40 33 0
INFO@THERMACUT.DE

WWW.THERMACUT.COM
TEL.: 1-603-542-6715
CUSTOMERSERVICE@THERMACUT.COM

THERMACUT®, FHT-EX® AND EX-TRAFIRE® ARE REGISTERED TRADEMARKS OF THERMACUT, K.S. AND MAY BE REGISTERED IN CZECH REPUBLIC AND/OR OTHER COUNTRIES. ALL OTHER TRADEMARKS ARE PROPERTIES OF THEIR RESPECTIVE OWNERS. THERMACUT IS NO WAY AFFILIATED WITH Hypertherm®.
MOST THERMACUT PARTS ARE MADE FOR OR BY AN IBG COMPANY. PARTS INDICATED WITH A OEM ARE ORIGINAL PARTS MANUFACTURED BY THE ABOVE NAMED MANUFACTURER AND ARE BEING RESOLD BY THERMACUT. THERMACUT RESERVES THE RIGHT TO SUBSTITUTE OEM PARTS IN PLACE OF THERMACUT PARTS.
VALID FROM FEBRUARY 2018 • PREVIOUS VERSION IS NO LONGER VALID. • © COPYRIGHT 2018 BY THERMACUT® CZECH REPUBLIC. ALL RIGHTS RESERVED.

REPLACEMENT PARTS SUITABLE FOR
Hypertherm®

HyPerformance® Plasma
HPR®130XD/HPR®260XD/HPR®400XD mild steel

PRODUCT BROCHURE WITH DETAILS AT
WWW.THERMACUT.COM
VIDEO AVAILABLE AT YOUTUBE CHANEL ▸

Item	Part No.	Ref. No.	Description	Std. Pkg.
1.	T-11271	220747	Shield Cap 30–130A	1
⊙ 2.	T-11270 ⊙	220637-UR	Shield Cap 200–400A	1
3.	T-11113	220637 OEM	Shield Cap 400A (400A, Bevel)	1
4.	T-10878	220194	Shield 30A	10
5.	T-10882	220555	Shield 50A	10
6.	T-9838	220189	Shield 80A	10
7.	T-9839	220183	Shield 130A	10
⊙ 8.	T-11276 ⊙	220761-UR	Shield 200A	1
⊙ 9.	T-11277 ⊙	220764-UR	Shield 260A	1
10.	T-11523	220636 OEM	Shield 400A	1
⊙ 11.	T-11403 ⊙	220742-UR	Shield 80/130A, Bevel	1
NEW ⊙ 12.	T-11424 ⊙	220658-UR	Shield 200A, Bevel	1
⊙ 13.	T-11402 ⊙	220741-UR	Shield 260A, Bevel	1
14.	T-11272	220754	Inner Retaining Cap 30/50A	1
15.	T-11273	220756	Inner Retaining Cap 80/130A	1
⊙ 16.	T-11274 ⊙	220757-UR	Inner Retaining Cap 200A	1
16a.	N-20194		O-Ring	1
⊙ 17.	T-11275 ⊙	220760-UR	Inner Retaining Cap 260A	1
18.	T-11524	220635 OEM	Inner Retaining Cap 400A	1
NEW ⊙ 19.	T-11833 ⊙	220845-UR	Inner Retaining Cap 80/200A, Bevel	1
⊙ 20.	T-11401 ⊙	220740-UR	Inner Retaining Cap 130/260A, Bevel	1
21.	T-9834##	220193-UR	Nozzle 30A	1
	T-10936	220193	Nozzle 30A	1
22.	T-10313##	220554-UR	Nozzle 50A	1
	T-10940	220554	Nozzle 50A	1
23.	T-9835##	220188-UR	Nozzle 80A	1
	T-10935	220188	Nozzle 80A	1
24.	T-9836##	220182-UR	Nozzle 130A	1
	T-10934	220182	Nozzle 130A	1
25.	T-9967##	220354-UR	Nozzle 200A	1
	T-10937	220354	Nozzle 200A	1
26.	T-9972##	220439-UR	Nozzle 260A	1
	T-10938	220439	Nozzle 260A	1
27.	T-11525	220632 OEM	Nozzle 400A (400A, Bevel)	1
NEW NEW 28.	T-11832	220806	Nozzle 80A, Bevel	1
NEW 29.	T-10310##	220646-UR	Nozzle 130A, Bevel	1
	T-10941	220646	Nozzle 130A, Bevel	1

Item	Part No.	Ref. No.	Description	Std. Pkg.
NEW 30.	T-11425	220659	Nozzle 200A, Bevel	1
31.	T-10308##	220542-UR	Nozzle 260A, Bevel	1
	T-10939	220542	Nozzle 260A, Bevel	1
32.	T-10297	220180	Swirl Ring 30A	1
33.	T-10305	220553	Swirl Ring 50A	1
34.	T-10295	220179	Swirl Ring 80/130A (80/130A, Bevel)	1
35.	T-10296	220353	Swirl Ring 200A	1
36.	T-10271	220436	Swirl Ring 260A (260A, Bevel)	1
37.	T-11526	220631 OEM	Swirl Ring 400A (400A, Bevel)	1
#38.	T-9894#	220192-UR	Electrode 30A	5
#39.	T-10306#	220552-UR	Electrode 50A	5
#40.	T-9895#	220187-UR	Electrode 80A	5
#41.	T-12064#	220187-PRO	Electrode, Silver PRO 80A(=420566)	5
#42.	T-9920#	220181-UR	Electrode 130A	5
#43.	T-11203#	220181-PRO	Electrode, Silver PRO 130A(=220665-PRO)	5
#44.	T-9969#	220352-UR	Electrode 200A	5
#45.	T-11200#	220352-PRO	Electrode, Silver PRO 200A(=220666-PRO)	5
#46.	T-9974#	220435-UR	Electrode 260A	5
#47.	T-11197#	220435-PRO	Electrode, Silver PRO 260A(=220668-PRO)	5
48.	T-11527	220629 OEM	Electrode 400A (400A, Bevel)	5
#49.	T-4927#	220187-AG	Electrode, SilverEX-® 80A	5
#50.	T-4917#	220181-AG	Electrode, SilverEX-® 130A	5
#51.	T-4925#	220352-AG	Electrode, SilverEX-® 200A	5
#52.	T-4926#	220435-AG	Electrode, SilverEX-® 260A	5
NEW #53.	T-11831#	220802-UR	Electrode 80A, Bevel	5
#54.	T-10309#	220649-UR	Electrode 130A, Bevel	5
NEW #55.	T-11426#	220662-UR	Electrode 200A, Bevel	5
#56.	T-10307#	220541-UR	Electrode 260A, Bevel	5
#57.	T-9882#	220340-UR	Cooling Tube 30–260A	1
57a.	T-13016	026009	O-Ring	1
#58.	T-10472#	220700-UR	Cooling Tube 80–130A, Bevel	1
#59.	T-10323#	220571-UR	Cooling Tube 400A (260–400A, Bevel)	1
*60.	TN-0069*	104119-UR	Consumables Removal Tool	1
61.	T-0994	T-0994	Silicone Lubricant 25ml	1
62.	Torch, cable leads. See following pages for details.			
63.	Consumable Case. Details on the page 149, section Accessories.			
64.	Coolant Liquid. Details on the page 144, section Accessories.			

* FULLY INTERCHANGEABLE AND COMPATIBLE WITH ORIGINAL PARTS, BUT DIFFERS FROM ORIGINAL DESIGN

\# THERMACUT ELECTRODES HAS TO BE USED WITH THERMACUT DESIGN COOLING TUBE, OTHERWISE IT DOESN'T FIT TO THE TORCH, THERMACUT COOLING TUBE CAN BE USED FOR THERMACUT DESIGN ELECTRODES AND FOR ORIGINAL DESIGN TOO

⊙ MUST BE USED ONLY AS A SET OF SHIELD, SHIELD CAP AND INNER RETAINING CAP, THIS COMPLETE SET IS INTERCHANGEABLE AND COMPATIBLE WITH ORIGINAL PARTS

NOZZLES -UR IN SOME CASES CAN REQUIRE DECREASE OF GAS FLOW, OFFERS SAVINGS OF THE COSTS FOR OXYGEN

OEM ORIGINAL PARTS

-PRO SILVER PRO TECHNOLOGY INCREASES ELECTRODE LIFETIME SIGNIFICANTLY COMPARED TO STANDARD COPPER ELECTRODES

SMART SOLUTION - DESIGN IMPROVEMENTS THAT BRINGS ADDED VALUE SUCH AS IMPROVED LIFETIME OF CONSUMABLES, EXCELLENT CUT QUALITY, SPEED OR BETTER COST EFFECTIVENESS OF YOUR SYSTEM

Last update of this page: 15/02/2018. See Revision history for details.

THERMACUT®
THE CUTTING COMPANY®

WWW.THERMACUT.CZ
TEL.: +420 556 423 418
SALES@THERMACUT.CZ

WWW.THERMACUT.DE
TEL.: +49 (0) 27 39 40 33 0
INFO@THERMACUT.DE

WWW.THERMACUT.COM
TEL.: 1-603-542-6715
CUSTOMERSERVICE@THERMACUT.COM

THERMACUT®, FHT-EX® AND EX-TRAFIRE® ARE REGISTERED TRADEMARKS OF THERMACUT, K.S. AND MAY BE REGISTERED IN CZECH REPUBLIC AND/OR OTHER COUNTRIES. ALL OTHER TRADEMARKS ARE PROPERTIES OF THEIR RESPECTIVE OWNERS. THERMACUT IS NO WAY AFFILIATED WITH Hypertherm®.
MOST THERMACUT PARTS ARE MADE FOR OR BY AN IBG COMPANY. PARTS INDICATED WITH A OEM ARE ORIGINAL PARTS MANUFACTURED BY THE ABOVE NAMED MANUFACTURER AND ARE BEING RESOLD BY THERMACUT. THERMACUT RESERVES THE RIGHT TO SUBSTITUTE OEM PARTS IN PLACE OF THERMACUT PARTS.
VALID FROM FEBRUARY 2018 • PREVIOUS VERSION IS NO LONGER VALID. • © COPYRIGHT 2018 BY THERMACUT® CZECH REPUBLIC. ALL RIGHTS RESERVED.

REPLACEMENT PARTS SUITABLE FOR
Hypertherm®

HyPerformance® Plasma
HPR®130XD/HPR®260XD/HPR®400XD stainless steel

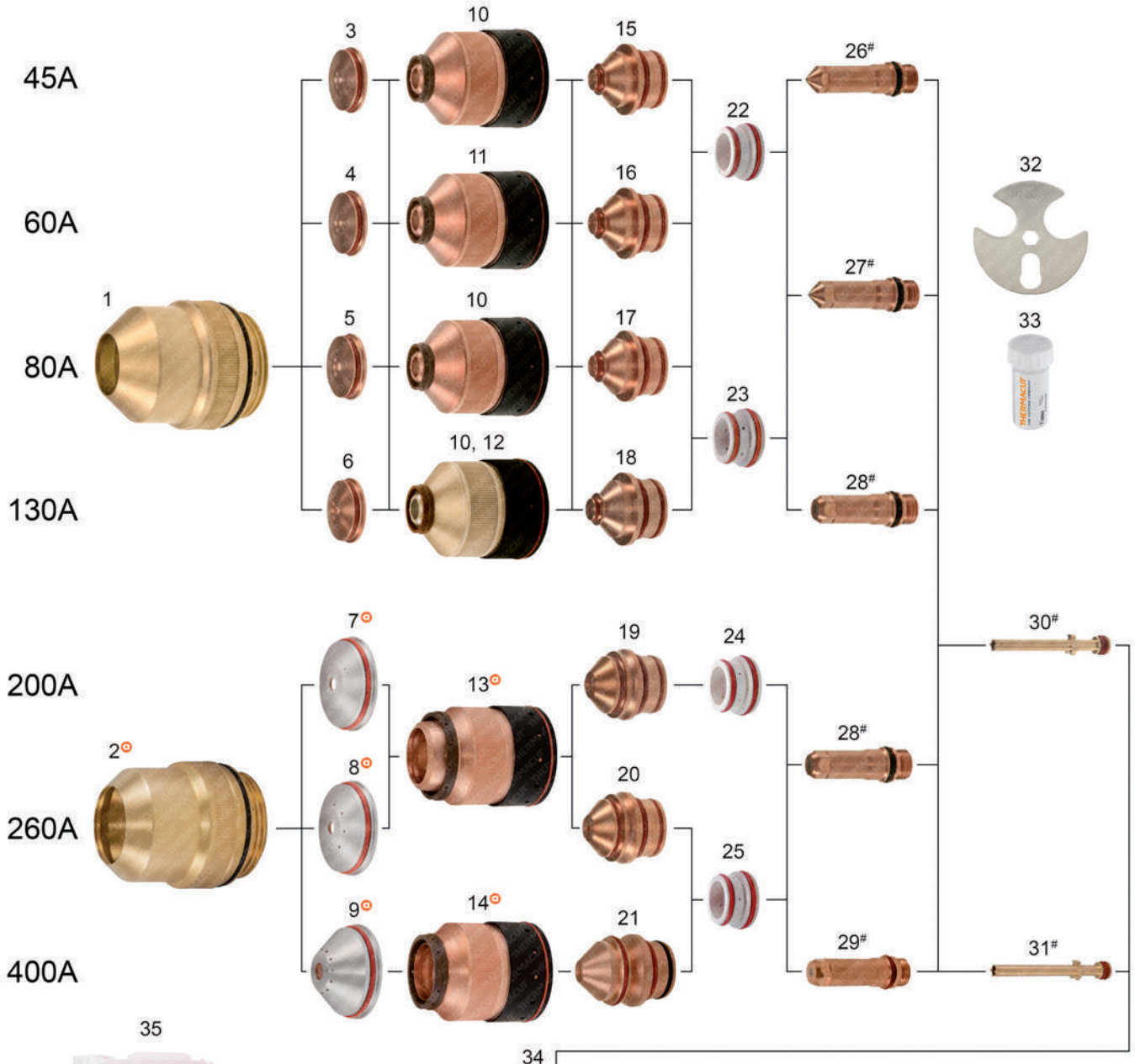

Last update of this page: 02/02/2018. See Revision history for details.

THERMACUT®, FHT-EX® AND EX-TRAFIRE® ARE REGISTERED TRADEMARKS OF THERMACUT, K.S. AND MAY BE REGISTERED IN CZECH REPUBLIC AND/OR OTHER COUNTRIES. ALL OTHER TRADEMARKS ARE PROPERTIES OF THEIR RESPECTIVE OWNERS. THERMACUT IS NO WAY AFFILIATED WITH Hypertherm®.
MOST THERMACUT PARTS ARE MADE FOR OR BY AN IBG COMPANY. PARTS INDICATED WITH A OEM ARE ORIGINAL PARTS MANUFACTURED BY THE ABOVE NAMED MANUFACTURER AND ARE BEING RESOLD BY THERMACUT. THERMACUT RESERVES THE RIGHT TO SUBSTITUTE OEM PARTS IN PLACE OF THERMACUT PARTS.
VALID FROM FEBRUARY 2018 • PREVIOUS VERSION IS NO LONGER VALID. • © COPYRIGHT 2018 BY THERMACUT® CZECH REPUBLIC. ALL RIGHTS RESERVED.

REPLACEMENT PARTS SUITABLE FOR
Hypertherm®

HyPerformance® Plasma
HPR®130XD/HPR®260XD/HPR®400XD stainless steel

PRODUCT BROCHURE WITH DETAILS AT
WWW.THERMACUT.COM
VIDEO AVAILABLE AT YOUTUBE CHANEL ▸

Item	Part No.	Ref. No.	Description	Std. Pkg.	Item	Part No.	Ref. No.	Description	Std. Pkg.
1.	T-11271	220747	Shield Cap 45–130A	1	19.	T-9987	220343	Nozzle 200A	1
⊙ 2.	T-11270 ⊙	220637-UR	Shield Cap 200–400A	1	20.	T-9990	220406	Nozzle 260A	1
3.	T-9975	220202	Shield 45A	1	21.	T-11960	220708	Nozzle 400A (400A Bevel)	1
4.	T-11954	220815	Shield 60A	1	22.	T-10297	220180	Swirl Ring 45A	1
5.	T-9979	220338	Shield 80A	1	23.	T-10295	220179	Swirl Ring 80/130A (130A Bevel)	1
6.	T-9982	220198	Shield 130A	1	24.	T-10579	220342	Swirl Ring 200A	1
⊙ 7.	T-11956 ⊙	220762-UR	Shield 200A	1	25.	T-10596	220405	Swirl Ring 260/400A (260/400A Bevel)	1
⊙ 8.	T-11957 ⊙	220763-UR	Shield 260A	1	26.	T-9978#	220308-UR	Electrode 45A	5
⊙ 9.	T-11958 ⊙	220707-UR	Shield 400A (400A Bevel)	1	27.	T-9981#	220339-UR	Electrode 60/80A	5
10.	T-11953	220755	Inner Retaining Cap 45/80/130A	1	28.	T-9984#	220307-UR	Electrode 130/200/260A	5
11.	T-11951	220814	Inner Retaining Cap 60A	1	29.	T-11950#	220709-UR	Electrode 400A (400A Bevel)	5
12.	T-11273	220756	Inner Retaining Cap 130A (N_2)	1	30.	T-9882#	220340-UR	Cooling Tube 30–260A	1
⊙ 13.	T-11955 ⊙	220758-UR	Inner Retaining Cap 200/260A	1	31.	T-10323#	220571-UR	Cooling Tube 400A (260–400A, Bevel)	1
⊙ 14.	T-11959 ⊙	220712-UR	Inner Retaining Cap 400A (400A Bevel)	1	32.	TN-0069*	104119-UR	Consumables Removal Tool	1
15.	T-9977	220201	Nozzle 45A	1	33.	T-0994	T-0994	Silicone Lubricant 25ml	1
16.	T-11952	220847	Nozzle 60A	1	34.	Torch, cable leads. See following pages for details.			
17.	T-9980	220337	Nozzle 80A	1	35.	Coolant Liquid. Details on the page 144, section Accessories.			
18.	T-9983	220197	Nozzle 130A	1					

* FULLY INTERCHANGEABLE AND COMPATIBLE WITH ORIGINAL PARTS, BUT DIFFERS FROM ORIGINAL DESIGN

\# THERMACUT ELECTRODES HAS TO BE USED WITH THERMACUT DESIGN COOLING TUBE, OTHERWISE IT DOESN'T FIT TO THE TORCH, THERMACUT COOLING TUBE CAN BE USED FOR THERMACUT DESIGN ELECTRODES AND FOR ORIGINAL DESIGN TOO

⊙ MUST BE USED ONLY AS A SET OF SHIELD, SHIELD CAP AND INNER RETAINING CAP, THIS COMPLETE SET IS INTERCHANGEABLE AND COMPATIBLE WITH ORIGINAL PARTS

SMART SOLUTION – DESIGN IMPROVEMENTS THAT BRINGS ADDED VALUE SUCH AS IMPROVED LIFETIME OF CONSUMABLES, EXCELLENT CUT QUALITY, SPEED OR BETTER COST EFFECTIVENESS OF YOUR SYSTEM

Last update of this page: 02/02/2018. See Revision history for details.

THERMACUT®
THE CUTTING COMPANY®

WWW.THERMACUT.CZ
TEL.: +420 556 423 418
SALES@THERMACUT.CZ

WWW.THERMACUT.DE
TEL.: +49 (0) 27 39 40 33 0
INFO@THERMACUT.DE

WWW.THERMACUT.COM
TEL.: 1-603-542-6715
CUSTOMERSERVICE@THERMACUT.COM

THERMACUT®, FHT-EX® AND EX-TRAFIRE® ARE REGISTERED TRADEMARKS OF THERMACUT, K.S. AND MAY BE REGISTERED IN CZECH REPUBLIC AND/OR OTHER COUNTRIES. ALL OTHER TRADEMARKS ARE PROPERTIES OF THEIR RESPECTIVE OWNERS. THERMACUT IS NO WAY AFFILIATED WITH Hypertherm®.
MOST THERMACUT PARTS ARE MADE FOR OR BY AN IBG COMPANY. PARTS INDICATED WITH A OEM ARE ORIGINAL PARTS MANUFACTURED BY THE ABOVE NAMED MANUFACTURER AND ARE BEING RESOLD BY THERMACUT. THERMACUT RESERVES THE RIGHT TO SUBSTITUTE OEM PARTS IN PLACE OF THERMACUT PARTS.
VALID FROM FEBRUARY 2018 • PREVIOUS VERSION IS NO LONGER VALID. • © COPYRIGHT 2018 BY THERMACUT® CZECH REPUBLIC. ALL RIGHTS RESERVED.

REPLACEMENT PARTS SUITABLE FOR
Hypertherm®

HyPerformance® Plasma
HPR®130XD/HPR®260XD/HPR®400XD aluminium

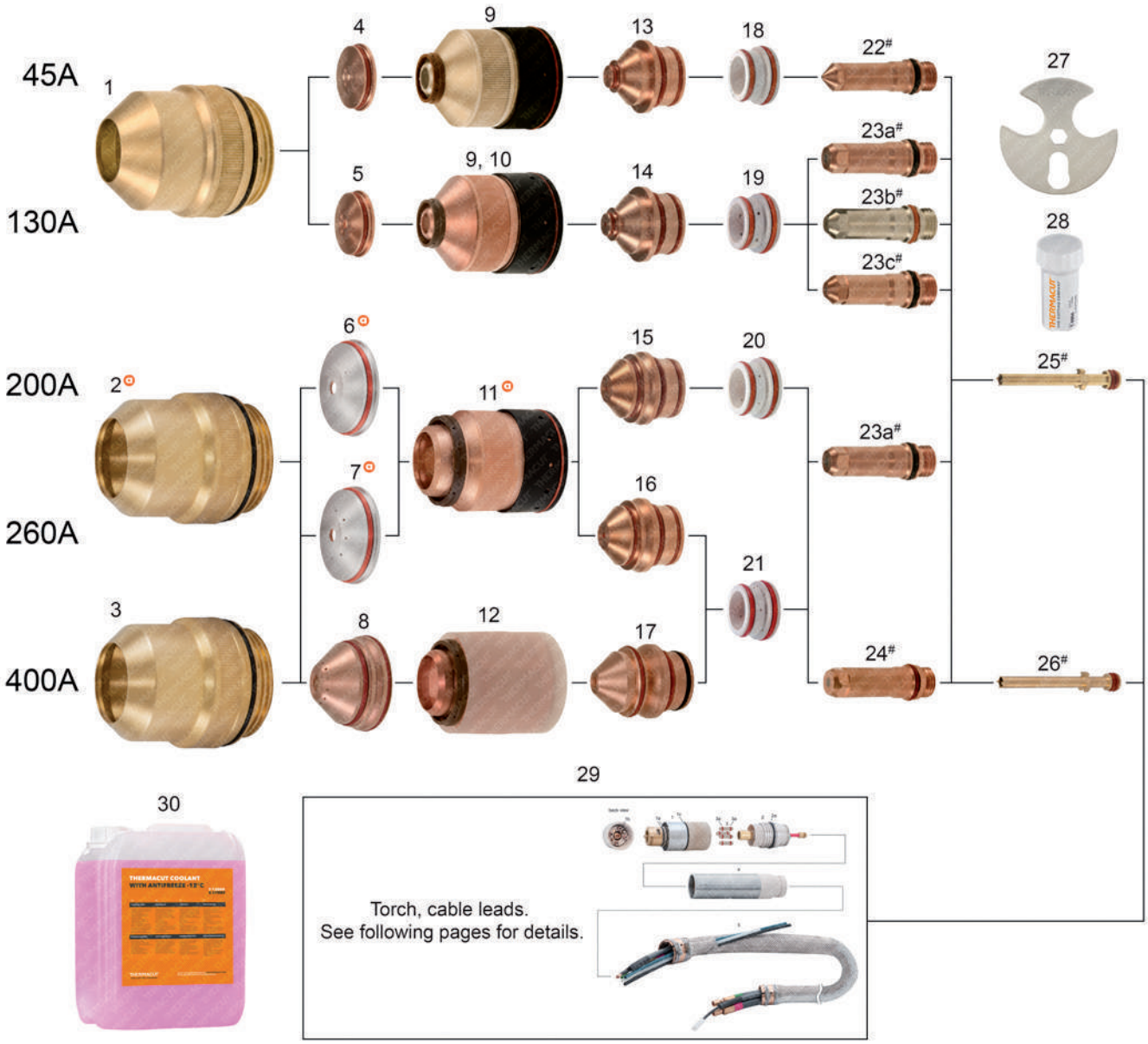

Last update of this page: 02/02/2018. See Revision history for details.

THERMACUT®
THE CUTTING COMPANY

WWW.THERMACUT.CZ
TEL.: +420 556 423 418
SALES@THERMACUT.CZ

WWW.THERMACUT.DE
TEL.: +49 (0) 27 39 40 33 0
INFO@THERMACUT.DE

WWW.THERMACUT.COM
TEL.: 1-603-542-6715
CUSTOMERSERVICE@THERMACUT.COM

THERMACUT®, FHT-EX® AND EX-TRAFIRE® ARE REGISTERED TRADEMARKS OF THERMACUT, K.S. AND MAY BE REGISTERED IN CZECH REPUBLIC AND/OR OTHER COUNTRIES. ALL OTHER TRADEMARKS ARE PROPERTIES OF THEIR RESPECTIVE OWNERS. THERMACUT IS NO WAY AFFILIATED WITH Hypertherm®.
MOST THERMACUT PARTS ARE MADE FOR OR BY AN IBG COMPANY. PARTS INDICATED WITH A OEM ARE ORIGINAL PARTS MANUFACTURED BY THE ABOVE NAMED MANUFACTURER AND ARE BEING RESOLD BY THERMACUT. THERMACUT RESERVES THE RIGHT TO SUBSTITUTE OEM PARTS IN PLACE OF THERMACUT PARTS.
VALID FROM FEBRUARY 2018 • PREVIOUS VERSION IS NO LONGER VALID. • © COPYRIGHT 2018 BY THERMACUT® CZECH REPUBLIC. ALL RIGHTS RESERVED.

REPLACEMENT PARTS SUITABLE FOR
Hypertherm®

HyPerformance® Plasma
HPR®130XD/HPR®260XD/HPR®400XD aluminium

PRODUCT BROCHURE WITH DETAILS AT
WWW.THERMACUT.COM
VIDEO AVAILABLE AT YOUTUBE CHANEL ▸

Item	Part No.	Ref. No.	Description	Std. Pkg.	Item	Part No.	Ref. No.	Description	Std. Pkg.
1.	T-11271	220747	Shield Cap 45–130A	1	17.	T-11960	220708	Nozzle 400A (400A, Bevel)	1
⊙ 2.	T-11270 ⊙	220637-UR	Shield Cap 200A	1	18.	T-10297	220180	Swirl Ring 45A	1
3.	T-11113	220637 OEM	Shield Cap 200–260A	1	19.	T-10295	220179	Swirl Ring 130A	1
4.	T-9975	220202	Shield 45A	10	20.	T-10579	220342	Swirl Ring 200A	1
5.	T-9982	220198	Shield 130A	10	21.	T-10596	220405	Swirl Ring 260/400A	1
⊙ 6.	T-11956 ⊙	220762-UR	Shield 200A	1	#22.	T-9978#	220308-UR	Electrode 45A	5
⊙ 7.	T-11957 ⊙	220763-UR	Shield 260A	1	#23.c	T-9920#	220181-UR	Electrode 130A (Air)	5
8.	T-11528	220707 OEM	Shield 400A	1	#23.b	T-4917#	220181-AG	Electrode, SilverEX® 130A (Air)	5
9.	T-11273	220756	Inner Retaining Cap 45/130A	1	#23.a	T-9984#	220307-UR	Electrode 130/200/260A	5
10.	T-11953	220755	Inner Retaining Cap 45/130A	1	24.	T-11950#	220709-UR	Electrode 400A (400A Bevel)	5
⊙ 11.	T-11955 ⊙	220758-UR	Inner Retaining Cap 200/260A	1	#25.	T-9882#	220340-UR	Cooling Tube 30–260A	1
12.	T-11529	220712 OEM	Inner Retaining Cap 400A	1	#26.	T-10323#	220571-UR	Cooling Tube 400A (260–400A, Bevel)	1
13.	T-9977	220201	Nozzle 45A	1	*27.	TN-0069*	104119-UR	Consumables Removal Tool	1
14.	T-9983	220197	Nozzle 130A	5	28.	T-0994	T-0994	Silicone Lubricant 25ml	1
15.	T-9987	220343	Nozzle 200A	1	29.	Torch, cable leads. See following pages for details.			
16.	T-9990	220406	Nozzle 260A	1	30.	Coolant Liquid. Details on the page 144, section Accessories.			

* FULLY INTERCHANGEABLE AND COMPATIBLE WITH ORIGINAL PARTS, BUT DIFFERS FROM ORIGINAL DESIGN

\# THERMACUT ELECTRODES HAS TO BE USED WITH THERMACUT DESIGN COOLING TUBE, OTHERWISE IT DOESN'T FIT TO THE TORCH, THERMACUT COOLING TUBE CAN BE USED FOR THERMACUT DESIGN ELECTRODES AND FOR ORIGINAL DESIGN TOO

⊙ MUST BE USED ONLY AS A SET OF SHIELD, SHIELD CAP AND INNER RETAINING CAP, THIS COMPLETE SET IS INTERCHANGEABLE AND COMPATIBLE WITH ORIGINAL PARTS

OEM ORIGINAL PARTS

SMART SOLUTION – DESIGN IMPROVEMENTS THAT BRINGS ADDED VALUE SUCH AS IMPROVED LIFETIME OF CONSUMABLES, EXCELLENT CUT QUALITY, SPEED OR BETTER COST EFFECTIVENESS OF YOUR SYSTEM

Last update of this page: 02/02/2018. See Revision history for details.

THERMACUT®, FHT-EX® AND EX-TRAFIRE® ARE REGISTERED TRADEMARKS OF THERMACUT, K.S. AND MAY BE REGISTERED IN CZECH REPUBLIC AND/OR OTHER COUNTRIES. ALL OTHER TRADEMARKS ARE PROPERTIES OF THEIR RESPECTIVE OWNERS. THERMACUT IS NO WAY AFFILIATED WITH Hypertherm®.
MOST THERMACUT PARTS ARE MADE FOR OR BY AN IBG COMPANY. PARTS INDICATED WITH A OEM ARE ORIGINAL PARTS MANUFACTURED BY THE ABOVE NAMED MANUFACTURER AND ARE BEING RESOLD BY THERMACUT. THERMACUT RESERVES THE RIGHT TO SUBSTITUTE OEM PARTS IN PLACE OF THERMACUT PARTS.
VALID FROM FEBRUARY 2018 • PREVIOUS VERSION IS NO LONGER VALID. • © COPYRIGHT 2018 BY THERMACUT® CZECH REPUBLIC. ALL RIGHTS RESERVED.

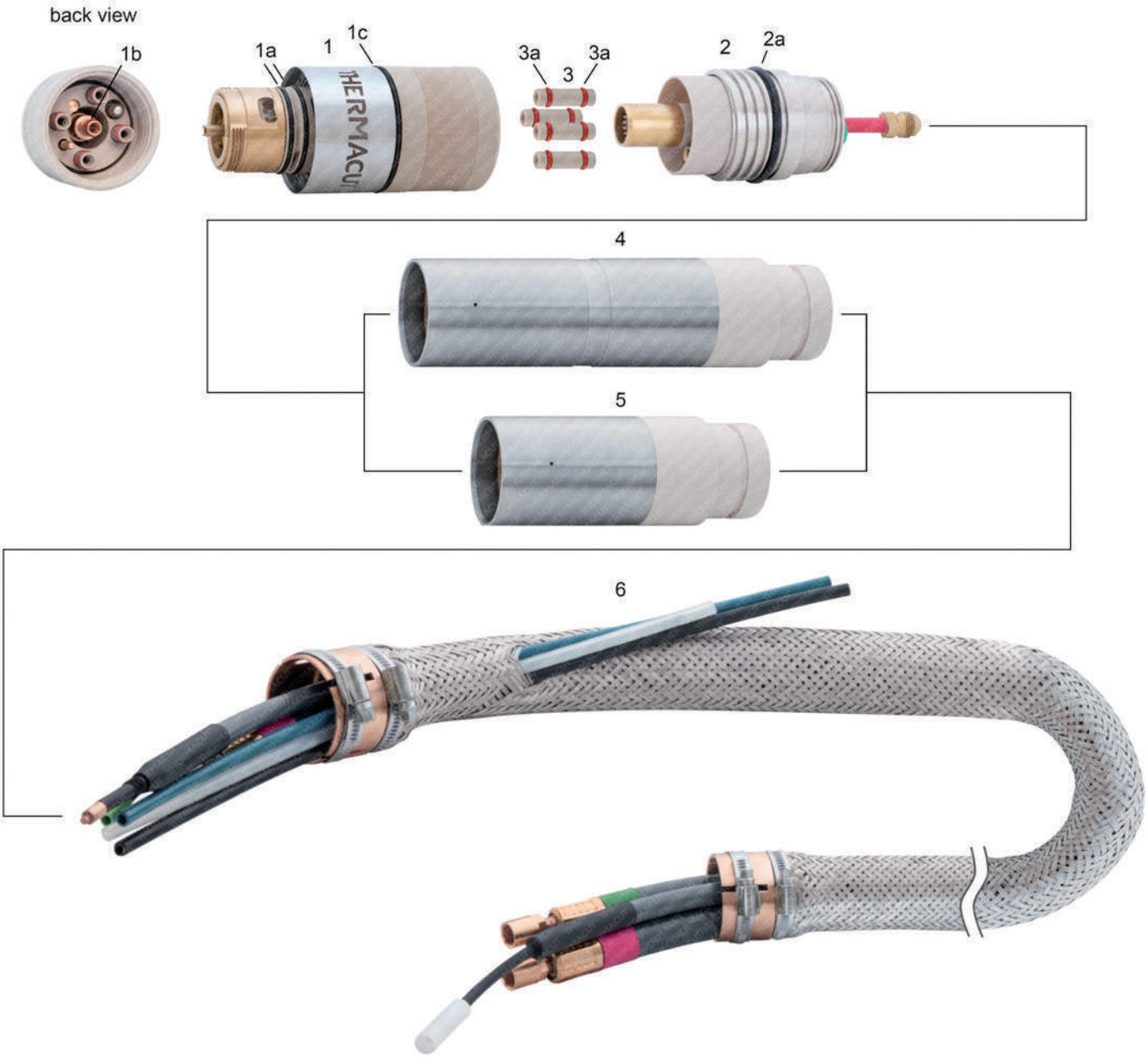

Last update of this page: 15/02/2018. See Revision history for details.

THERMACUT®, FHT-EX® AND EX-TRAFIRE® ARE REGISTERED TRADEMARKS OF THERMACUT, K.S. AND MAY BE REGISTERED IN CZECH REPUBLIC AND/OR OTHER COUNTRIES. ALL OTHER TRADEMARKS ARE PROPERTIES OF THEIR RESPECTIVE OWNERS. THERMACUT IS NO WAY AFFILIATED WITH Hypertherm®.
MOST THERMACUT PARTS ARE MADE FOR OR BY AN IBG COMPANY. PARTS INDICATED WITH A OEM ARE ORIGINAL PARTS MANUFACTURED BY THE ABOVE NAMED MANUFACTURER AND ARE BEING RESOLD BY THERMACUT. THERMACUT RESERVES THE RIGHT TO SUBSTITUTE OEM PARTS IN PLACE OF THERMACUT PARTS.
VALID FROM FEBRUARY 2018 • PREVIOUS VERSION IS NO LONGER VALID. • © COPYRIGHT 2018 BY THERMACUT® CZECH REPUBLIC. ALL RIGHTS RESERVED.

REPLACEMENT PARTS SUITABLE FOR
Hypertherm®
HPR®130XD/HPR®260XD/HPR®400XD
Torches and Cable leads

Item	Part No.	Ref. No.	Description	Std. Pkg.
1.	T-11834	220706	Torch Q. D. (included 2pcs cooling tube 220340-UR)	1
1a.	N-10096	1-028B	O-Ring	1
1b.	N-10054	1-008S	O-Ring	1
1c.	N-18157	N-18157	Conical Sealing	1
2.	T-11844	220705	Receptacle Q. D.	1
2a.	N-18108	O-KR-45x3,5B	O-Ring	1
3.	T-11769	T-11769	Connector Tube HPR with O-Rings	1
3a.	N-10055	1-009S	O-Ring	1
4.	T-11854	220789	Mounting Sleeve XD	1
5.	T-12226	220788	Mounting Sleeve XD – Short	1
!6.	KT-1423	228291	Cable Leads 2m (6ft) w/ gas hose 1,8m (6ft)	1
!	KT-1440	228410	Cable Leads 2m (6ft) w/ gas hose 2,4m (8ft)	1
!	KT-1424	228292	Cable Leads 3m (10ft) w/ gas hose 1,8m (6ft)	1
!	KT-1439	228411	Cable Leads 3m (10ft) w/ gas hose 2,4m (8ft)	1
!	KT-1425	228293	Cable Leads 4,5m (15ft) w/ gas hose 1,8m (6ft)	1
!	KT-1438	228412	Cable Leads 4,5m (15ft) w/ gas hose 2,4m (8ft)	1
!	KT-1426	228294	Cable Leads 6m (20ft) w/ gas hose 1,8m (6ft)	1

Item	Part No.	Ref. No.	Description	Std. Pkg.
!	KT-1441	228413	Cable Leads 6m (20ft) w/ gas hose 2,4m (8ft)	1
!	KT-1427	228295	Cable Leads 7,5m (25ft) w/ gas hose 1,8m (6ft)	1
!	KT-1442	228414	Cable Leads 7,5m (25ft) w/ gas hose 2,4m (8ft)	1
!	KT-1428	228296	Cable Leads 10m (35ft) w/ gas hose 1,8m (6ft)	1
!	KT-1437	228415	Cable Leads 10m (35ft) w/ gas hose 2,4m (8ft)	1
!	KT-1429	228297	Cable Leads 15m (50ft) w/ gas hose 1,8m (6ft)	1
!	KT-1436	228416	Cable Leads 15m (50ft) w/ gas hose 2,4m (8ft)	1
!	KT-1430	228547	Cable Leads 20m (65ft) w/ gas hose 1,8m (6ft)	1
!	KT-1434	228546	Cable Leads 20m (65ft) w/ gas hose 2,4m (8ft)	1
!!!	KT-1435	DEMO HPRXD	Torch + cable leads 0,8m, for exhibition only, inoperative!	1
NS	KT-1477	K.HPRXD.4,5M.6GAS	Torch with Leads 4,5m (6´)	1
More types of cable leads are available on request				
1a, 1b, 1c, 3, 3a	T-11864	128879	Torch Kit - set of spare parts for 220706, contains items 3 (4 pcs), 3a (8 pcs), 1a (2 pcs), 1b (1 pc), 1c (1 pc), 2a (1 pc), cooling tube 220340-UR, silicone lubricant T-0994	1
Torch with leads available on request				

! OHMIC CONTACT WIRE IS NOT PART OF THE CABLE LEADS
!!! DEMO IS INOPERATIVE, FOR EXHIBITION PURPOSES ONLY!
NS NOT SHOWN IN THE PICTURE
Q.D. QUICK DISCONNECT
ALL PARTS ARE WITH O-RINGS
W/ WITH

Last update of this page: 15/02/2018. See Revision history for details.

THERMACUT®, FHT-EX® AND EX-TRAFIRE® ARE REGISTERED TRADEMARKS OF THERMACUT, K.S. AND MAY BE REGISTERED IN CZECH REPUBLIC AND/OR OTHER COUNTRIES. ALL OTHER TRADEMARKS ARE PROPERTIES OF THEIR RESPECTIVE OWNERS. THERMACUT IS NO WAY AFFILIATED WITH Hypertherm®.
MOST THERMACUT PARTS ARE MADE FOR OR BY AN IBG COMPANY. PARTS INDICATED WITH A OEM ARE ORIGINAL PARTS MANUFACTURED BY THE ABOVE NAMED MANUFACTURER AND ARE BEING RESOLD BY THERMACUT. THERMACUT RESERVES THE RIGHT TO SUBSTITUTE OEM PARTS IN PLACE OF THERMACUT PARTS.
VALID FROM FEBRUARY 2018 • PREVIOUS VERSION IS NO LONGER VALID. • © COPYRIGHT 2018 BY THERMACUT® CZECH REPUBLIC. ALL RIGHTS RESERVED.

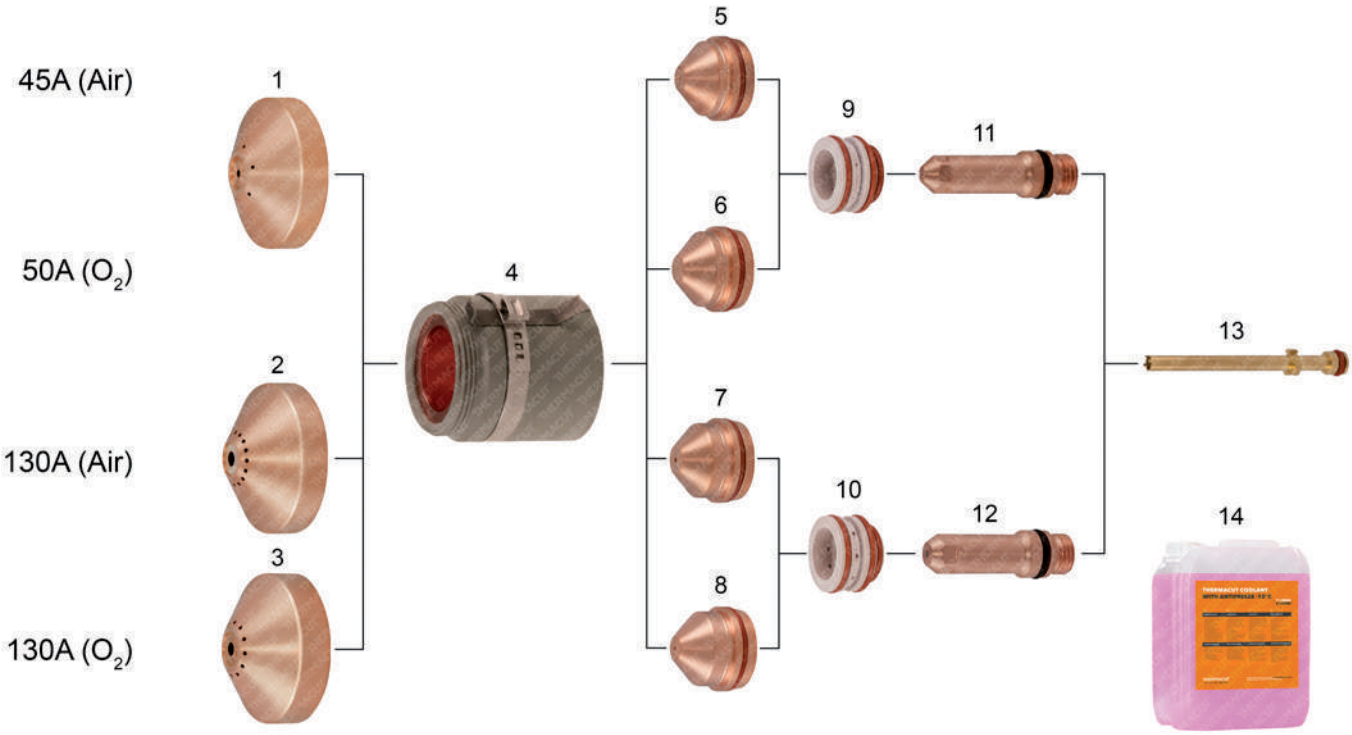

Item	Part No.	Ref. No.	Description	Std. Pkg.
NEW 1.	T-11283	220532	Shield 45A Air, 50A O_2	1
NEW 2.	T-11284	220536	Shield 130A Air	1
NEW 3.	T-11281	220491	Shield 130A O_2	1
NEW *4.	T-11285*	220578-UR	Ret. Cap 45/130A Air, 50/130A O_2 with IHS	1
NEW *NS	T-11347*	220490-UR	Ret. Cap 45/130A Air, 50/130A O_2 without IHS	1
NEW 5.	T-11308	220525	Nozzle 45A Air	5
NEW 6.	T-11311	220530	Nozzle 50A O_2	5
NEW 7.	T-11306	220492	Nozzle 130A Air	5

Item	Part No.	Ref. No.	Description	Std. Pkg.
NEW 8.	T-11305	220489	Nozzle 130A O_2	5
NEW 9.	T-11282	220529	Swirl Ring 45A Air, 50A O_2	1
NEW 10.	T-11280	220488	Swirl Ring 130A (200A)	1
NEW #11.	T-11309#	220528-UR	Electrode 45A (50A)	5
NEW #12.	T-11304#	220487-UR	Electrode 130A Air/O_2	5
NEW #13.	T-11307#	220521-UR	Cooling Tube	1
14.	Coolant Liquid. Details on the page 144, section Accessories.			

* FULLY INTERCHANGEABLE WITH ORIGINAL PARTS, BUT DIFFERS FROM ORIGINAL DESIGN

\# THERMACUT ELECTRODES HAS TO BE USED WITH THERMACUT DESIGN COOLING TUBE, OTHERWISE IT DOESN'T FIT TO THE TORCH, THERMACUT COOLING TUBE CAN BE USED FOR THERMACUT DESIGN ELECTRODES AND FOR ORIGINAL DESIGN TOO.

Last update of this page: 11/04/2016. See Revision history for details.

THERMACUT®, FHT-EX® AND EX-TRAFIRE® ARE REGISTERED TRADEMARKS OF THERMACUT, K.S. AND MAY BE REGISTERED IN CZECH REPUBLIC AND/OR OTHER COUNTRIES. ALL OTHER TRADEMARKS ARE PROPERTIES OF THEIR RESPECTIVE OWNERS. THERMACUT IS NO WAY AFFILIATED WITH Hypertherm®.
MOST THERMACUT PARTS ARE MADE FOR OR BY AN IBG COMPANY. PARTS INDICATED WITH A OEM ARE ORIGINAL PARTS MANUFACTURED BY THE ABOVE NAMED MANUFACTURER AND ARE BEING RESOLD BY THERMACUT. THERMACUT RESERVES THE RIGHT TO SUBSTITUTE OEM PARTS IN PLACE OF THERMACUT PARTS.
VALID FROM FEBRUARY 2018 • PREVIOUS VERSION IS NO LONGER VALID. • © COPYRIGHT 2018 BY THERMACUT® CZECH REPUBLIC. ALL RIGHTS RESERVED.

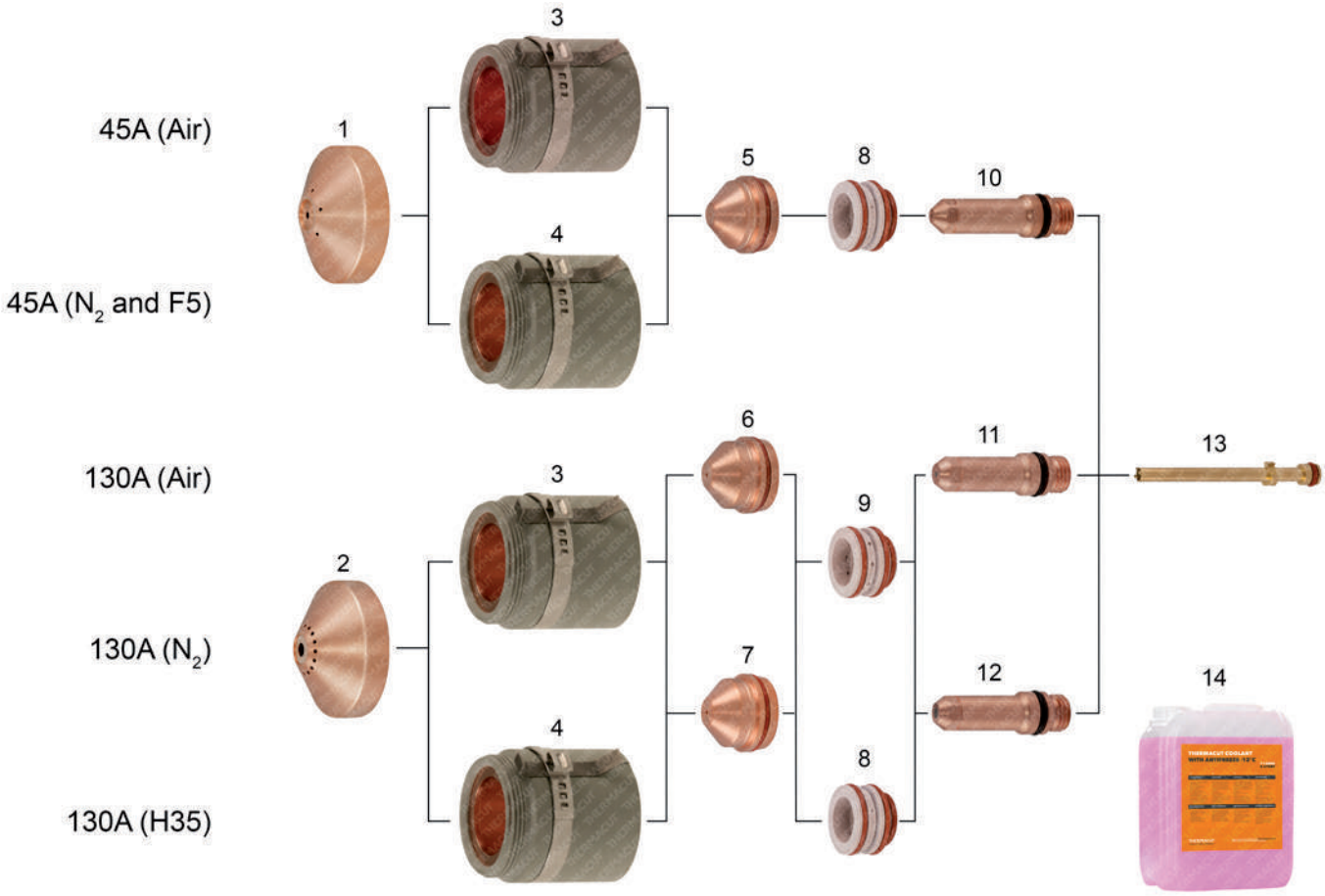

Item	Part No.	Ref. No.	Description	Std. Pkg.
NEW 1.	T-11283	220532	Shield 45A Air/N_2/F5	1
NEW 2.	T-11284	220536	Shield 130A Air/H35/N_2	1
NEW *3.	T-11285*	220578-UR	Ret. Cap 45A Air, 130A Air/N_2 w/ IHS	1
NEW *NS	T-11347*	220490-UR	Ret. Cap 45A Air, 130A Air/N_2 w/o IHS	1
NEW *4.	T-11350*	220534-UR	Ret. Cap 45A N_2/F5, 130A H35 w/ IHS	1
NEW *NS	T-11346*	220533-UR	Ret. Cap 45A N_2/F5, 130A H35 w/o IHS	1
NEW 5.	T-11308	220525	Nozzle 45A Air/N_2/F5	5
NEW 6.	T-11306	220492	Nozzle 130A Air	5

Item	Part No.	Ref. No.	Description	Std. Pkg.
NEW 7.	T-11310	220535	Nozzle 130A H35/N_2	5
NEW 8.	T-11282	220529	Swirl Ring 45A Air/N_2/F5, 130A H35	1
NEW 9.	T-11280	220488	Swirl Ring 130A (200A)	1
NEW #10.	T-11309#	220528-UR	Electrode 45A (50A)	5
NEW #11.	T-11304#	220487-UR	Electrode 130A Air	5
NEW #12.	T-0382#	020415-UR	Electrode 100–200A	5
NEW #13.	T-11307#	220521-UR	Cooling Tube	1
14.	Coolant Liquid. Details on the page 144, section Accessories.			

* FULLY INTERCHANGEABLE WITH ORIGINAL PARTS, BUT DIFFERS FROM ORIGINAL DESIGN

\# THERMACUT ELECTRODES HAS TO BE USED WITH THERMACUT DESIGN COOLING TUBE, OTHERWISE IT DOESN'T FIT TO THE TORCH, THERMACUT COOLING TUBE CAN BE USED FOR THERMACUT DESIGN ELECTRODES AND FOR ORIGINAL DESIGN TOO.

W/ WITH

W/O WITHOUT

Last update of this page: 11/04/2016. See Revision history for details.

THERMACUT®, FHT-EX® AND EX-TRAFIRE® ARE REGISTERED TRADEMARKS OF THERMACUT, K.S. AND MAY BE REGISTERED IN CZECH REPUBLIC AND/OR OTHER COUNTRIES. ALL OTHER TRADEMARKS ARE PROPERTIES OF THEIR RESPECTIVE OWNERS. THERMACUT IS NO WAY AFFILIATED WITH Hypertherm®.
MOST THERMACUT PARTS ARE MADE FOR OR BY AN IBG COMPANY. PARTS INDICATED WITH A OEM ARE ORIGINAL PARTS MANUFACTURED BY THE ABOVE NAMED MANUFACTURER AND ARE BEING RESOLD BY THERMACUT. THERMACUT RESERVES THE RIGHT TO SUBSTITUTE OEM PARTS IN PLACE OF THERMACUT PARTS.
VALID FROM FEBRUARY 2018 • PREVIOUS VERSION IS NO LONGER VALID. • © COPYRIGHT 2018 BY THERMACUT® CZECH REPUBLIC. ALL RIGHTS RESERVED.

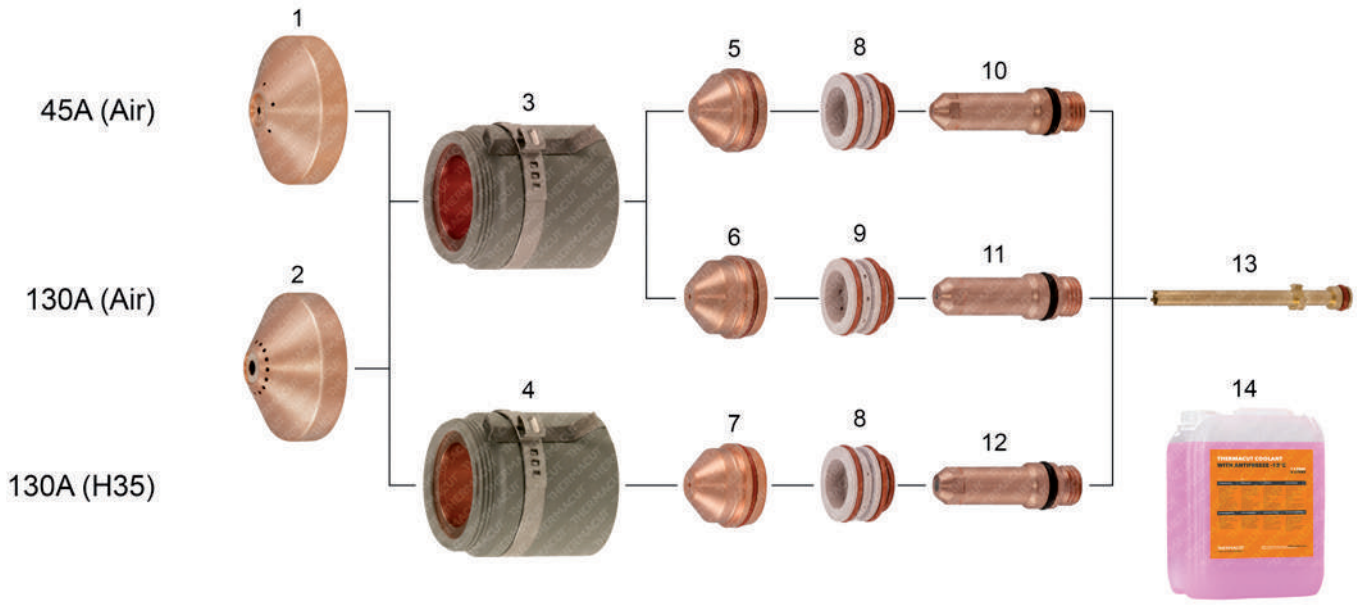

Item	Part No.	Ref. No.	Description	Std. Pkg.
NEW 1.	T-11283	220532	Shield 45A Air	1
NEW 2.	T-11284	220536	Shield 130A Air/H35	1
NEW *3.	T-11285*	220578-UR	Retaining Cap 45/130A Air with IHS	1
NEW *NS	T-11347*	220490-UR	Retaining Cap 45/130A Air without IHS	1
NEW *4.	T-11350*	220534-UR	Retaining Cap 130A H35 with IHS	1
NEW *NS	T-11346*	220533-UR	Retaining Cap 130A H35 without IHS	1
NEW 5.	T-11308	220525	Nozzle 45A Air	5
NEW 6.	T-11306	220492	Nozzle 130A Air	5

Item	Part No.	Ref. No.	Description	Std. Pkg.
NEW 7.	T-11310	220535	Nozzle 130A H35	5
NEW 8.	T-11282	220529	Swirl Ring 45A Air, 130A H35	1
NEW 9.	T-11280	220488	Swirl Ring 130A (200A)	1
NEW #10.	T-11309#	220528-UR	Electrode 45A (50A)	5
NEW #11.	T-11304#	220487-UR	Electrode 130A Air	5
NEW #12.	T-0382#	020415-UR	Electrode 100–200A	5
NEW #13.	T-11307#	220521-UR	Cooling Tube	1
14.	Coolant Liquid. Details on the page 144, section Accessories.			

* FULLY INTERCHANGEABLE WITH ORIGINAL PARTS, BUT DIFFERS FROM ORIGINAL DESIGN

\# THERMACUT ELECTRODES HAS TO BE USED WITH THERMACUT DESIGN COOLING TUBE, OTHERWISE IT DOESN'T FIT TO THE TORCH, THERMACUT COOLING TUBE CAN BE USED FOR THERMACUT DESIGN ELECTRODES AND FOR ORIGINAL DESIGN TOO.

Last update of this page: 11/04/2016. See Revision history for details.

THERMACUT®, FHT-EX® AND EX-TRAFIRE® ARE REGISTERED TRADEMARKS OF THERMACUT, K.S. AND MAY BE REGISTERED IN CZECH REPUBLIC AND/OR OTHER COUNTRIES. ALL OTHER TRADEMARKS ARE PROPERTIES OF THEIR RESPECTIVE OWNERS. THERMACUT IS NO WAY AFFILIATED WITH Hypertherm®.
MOST THERMACUT PARTS ARE MADE FOR OR BY AN IBG COMPANY. PARTS INDICATED WITH A OEM ARE ORIGINAL PARTS MANUFACTURED BY THE ABOVE NAMED MANUFACTURER AND ARE BEING RESOLD BY THERMACUT. THERMACUT RESERVES THE RIGHT TO SUBSTITUTE OEM PARTS IN PLACE OF THERMACUT PARTS.
VALID FROM FEBRUARY 2018 • PREVIOUS VERSION IS NO LONGER VALID. • © COPYRIGHT 2018 BY THERMACUT® CZECH REPUBLIC. ALL RIGHTS RESERVED.

REPLACEMENT PARTS SUITABLE FOR
KALIBURN®

SPIRIT®, ProLine™
SPIRIT® 150a, 200a, 275a, 400a, ProLine™ 2150, 2200, 2260 mild steel

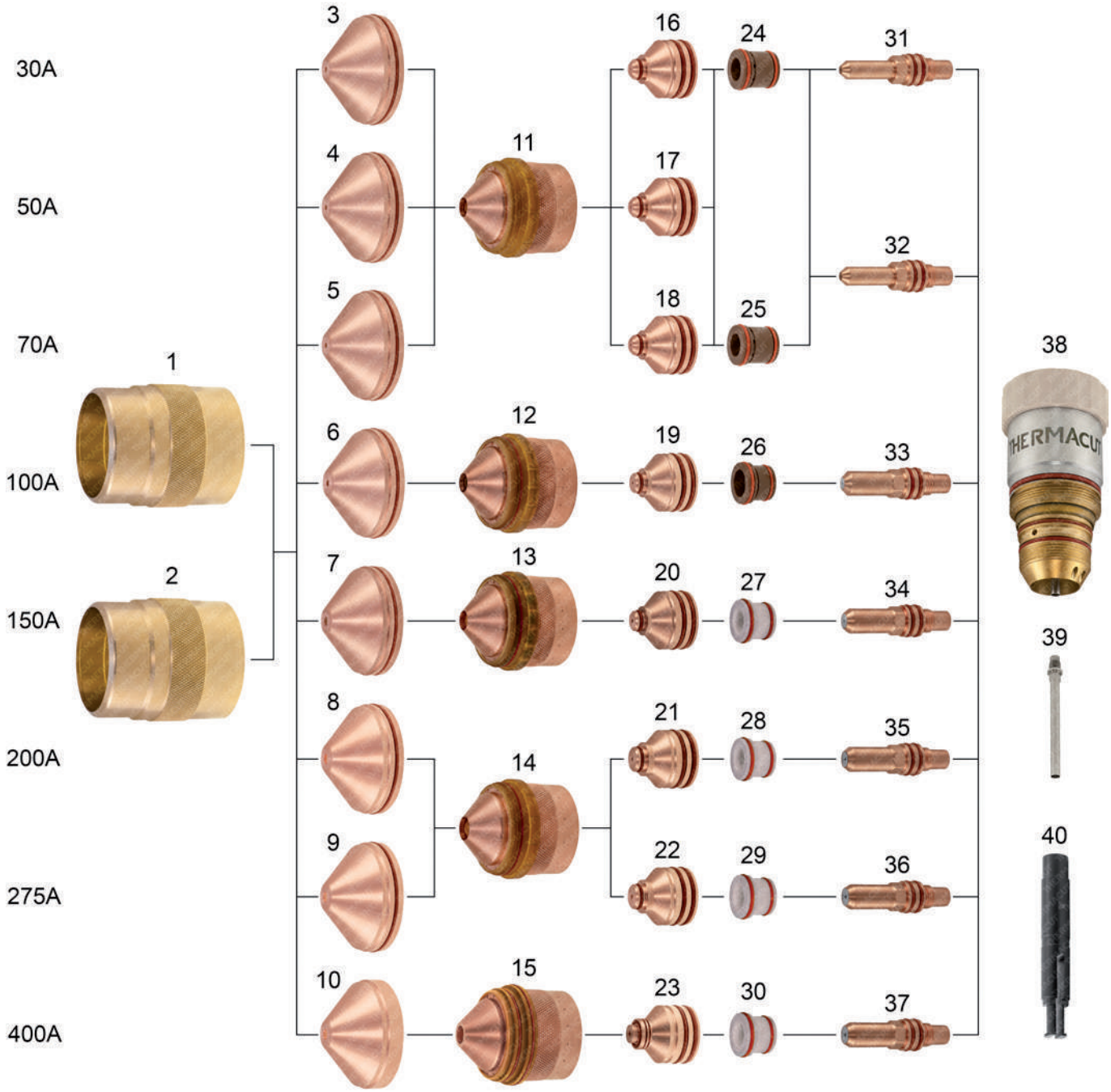

Last update of this page: 15/02/2018. See Revision history for details.

THERMACUT®
THE CUTTING COMPANY

WWW.THERMACUT.CZ
TEL.: +420 556 423 418
SALES@THERMACUT.CZ

WWW.THERMACUT.DE
TEL.: +49 (0) 27 39 40 33 0
INFO@THERMACUT.DE

WWW.THERMACUT.COM
TEL.: 1-603-542-6715
CUSTOMERSERVICE@THERMACUT.COM

THERMACUT®, FHT-EX® AND EX-TRAFIRE® ARE REGISTERED TRADEMARKS OF THERMACUT, K.S. AND MAY BE REGISTERED IN CZECH REPUBLIC AND/OR OTHER COUNTRIES. ALL OTHER TRADEMARKS ARE PROPERTIES OF THEIR RESPECTIVE OWNERS. THERMACUT IS NO WAY AFFILIATED WITH KALIBURN®.
MOST THERMACUT PARTS ARE MADE FOR OR BY AN IBG COMPANY. PARTS INDICATED WITH A OEM ARE ORIGINAL PARTS MANUFACTURED BY THE ABOVE NAMED MANUFACTURER AND ARE BEING RESOLD BY THERMACUT. THERMACUT RESERVES THE RIGHT TO SUBSTITUTE OEM PARTS IN PLACE OF THERMACUT PARTS.
VALID FROM FEBRUARY 2018 • PREVIOUS VERSION IS NO LONGER VALID. • © COPYRIGHT 2018 BY THERMACUT® CZECH REPUBLIC. ALL RIGHTS RESERVED.

REPLACEMENT PARTS SUITABLE FOR
KALIBURN®

SPIRIT®, ProLine™
SPIRIT® 150a, 200a, 275a, 400a, ProLine™ 2150, 2200, 2260 mild steel

PRODUCT BROCHURE WITH DETAILS AT
WWW.THERMACUT.COM

Item	Part No.	Ref. No.	Description	Std. Pkg.	Item	Part No.	Ref. No.	Description	Std. Pkg.
1.	T-11909	284150	Outer Retaining Cap 30–400A	1	21.	T-11884	277289	Nozzle 200A MS/SS/AL, Air	1
2.	T-11892	277154	Outer Retaining Cap 30–275A	1	22.	T-11888	277269	Nozzle 275A MS	5
3.	T-12034	277145	Shield Cap 30A, MS/AL	1	23.	T-12028	284125	Nozzle 400A MS	5
4.	T-12029	277115	Shield Cap 50A, MS	1	24.	T-12033	277140	Swirl Ring 30–70A MS/SS/AL, H17	1
5.	T-11901	277150	Shield Cap 70A MS/SS/AL	1	25.	T-11894	277142	Swirl Ring 50–70A MS/SS/AL	1
6.	T-11898	277286	Shield Cap 100A MS/SS/AL, Air	1	26.	T-11893	277283	Swirl Ring 100A MS/SS/AL, Air	1
7.	T-11907	277117	Shield Cap 150A MS/SS/AL	1	*27.	T-11897	277139-UR	Swirl Ring 150A MS/SS/AL	1
8.	T-11899	277274	Shield Cap 200A MS/SS/AL	1	*28.	T-11896	277143-UR	Swirl Ring 200A MS/SS/AL	1
9.	T-11900	277263	Shield Cap 275A MS/SS/AL	1	*29.	T-11895	277258-UR	Swirl Ring 275A MS/SS/AL	1
10.	T-12037	284123	Shield Cap 400A MS	1	*30.	T-12036	284122-UR	Swirl Ring 400A MS/SS/AL	1
11.	T-11891	277153	Inner Retaining Cap 30–70A MS/SS/AL	1	31.	T-12032	277130	Electrode 30A MS/AL	5
12.	T-11908	277151	Inner Retaining Cap 100/150A MS/SS/AL	1	32.	T-11906	277131	Electrode 50/70A MS/SS/AL	5
13.	T-11890	277152	Inner Retaining Cap 150A MS/SS/AL	1	33.	T-11902	277282-PRO	Electrode 100A, MS/SS/AL, Silver PRO	5
14.	T-11889	277266	Inner Retaining Cap 200/275A MS/SS/AL	1	34.	T-11904	277292-PRO	Electrode 150A MS/SS/AL, Silver PRO	5
15.	T-12035	284121	Inner Retaining Cap 400A MS	1	35.	T-11903	277291-PRO	Electrode 200A MS/SS/AL, Silver PRO	5
16.	T-12030	277120	Nozzle 30A MS/AL	5	36.	T-11905	277270-PRO	Electrode 275A MS/SS/AL, Silver PRO	5
17.	T-12031	277122	Nozzle 50A MS/AL	5	37.	T-12038	284124-PRO	Electrode 400A MS, Silver PRO	1
18.	T-11887	277125	Nozzle 70A MS/SS/AL	5	38.	T-12182	279150	Torch Head	1
19.	T-11886	277284	Nozzle 100A MS/SS/AL, Air	1	39.	T-11944	277007	Cooling Tube	1
20.	T-11885	277293	Nozzle 150A MS/SS/AL, Air	5	40.	T-11322	12.40320	Wrench for Swirl Ring 150–400A	1

* FULLY INTERCHANGEABLE AND COMPATIBLE WITH ORIGINAL PARTS, BUT DIFFERS FROM ORIGINAL DESIGN

-PRO SILVER PRO TECHNOLOGY INCREASES ELECTRODE LIFETIME SIGNIFICANTLY COMPARED TO STANDARD COPPER ELECTRODES

Last update of this page: 15/02/2018. See Revision history for details.

THERMACUT®
THE CUTTING COMPANY®

WWW.THERMACUT.CZ
TEL.: +420 556 423 418
SALES@THERMACUT.CZ

WWW.THERMACUT.DE
TEL.: +49 (0) 27 39 40 33 0
INFO@THERMACUT.DE

WWW.THERMACUT.COM
TEL.: 1-603-542-6715
CUSTOMERSERVICE@THERMACUT.COM

THERMACUT®, FHT-EX® AND EX-TRAFIRE® ARE REGISTERED TRADEMARKS OF THERMACUT, K.S. AND MAY BE REGISTERED IN CZECH REPUBLIC AND/OR OTHER COUNTRIES. ALL OTHER TRADEMARKS ARE PROPERTIES OF THEIR RESPECTIVE OWNERS. THERMACUT IS NO WAY AFFILIATED WITH KALIBURN®.
MOST THERMACUT PARTS ARE MADE FOR OR BY AN IBG COMPANY. PARTS INDICATED WITH A OEM ARE ORIGINAL PARTS MANUFACTURED BY THE ABOVE NAMED MANUFACTURER AND ARE BEING RESOLD BY THERMACUT. THERMACUT RESERVES THE RIGHT TO SUBSTITUTE OEM PARTS IN PLACE OF THERMACUT PARTS.
VALID FROM FEBRUARY 2018 • PREVIOUS VERSION IS NO LONGER VALID. • © COPYRIGHT 2018 BY THERMACUT® CZECH REPUBLIC. ALL RIGHTS RESERVED.

REPLACEMENT PARTS SUITABLE FOR
KALIBURN®

SPIRIT®, ProLine™
SPIRIT® 150a, 200a, 275a, 400a, ProLine™ 2150, 2200, 2260 stainless steel

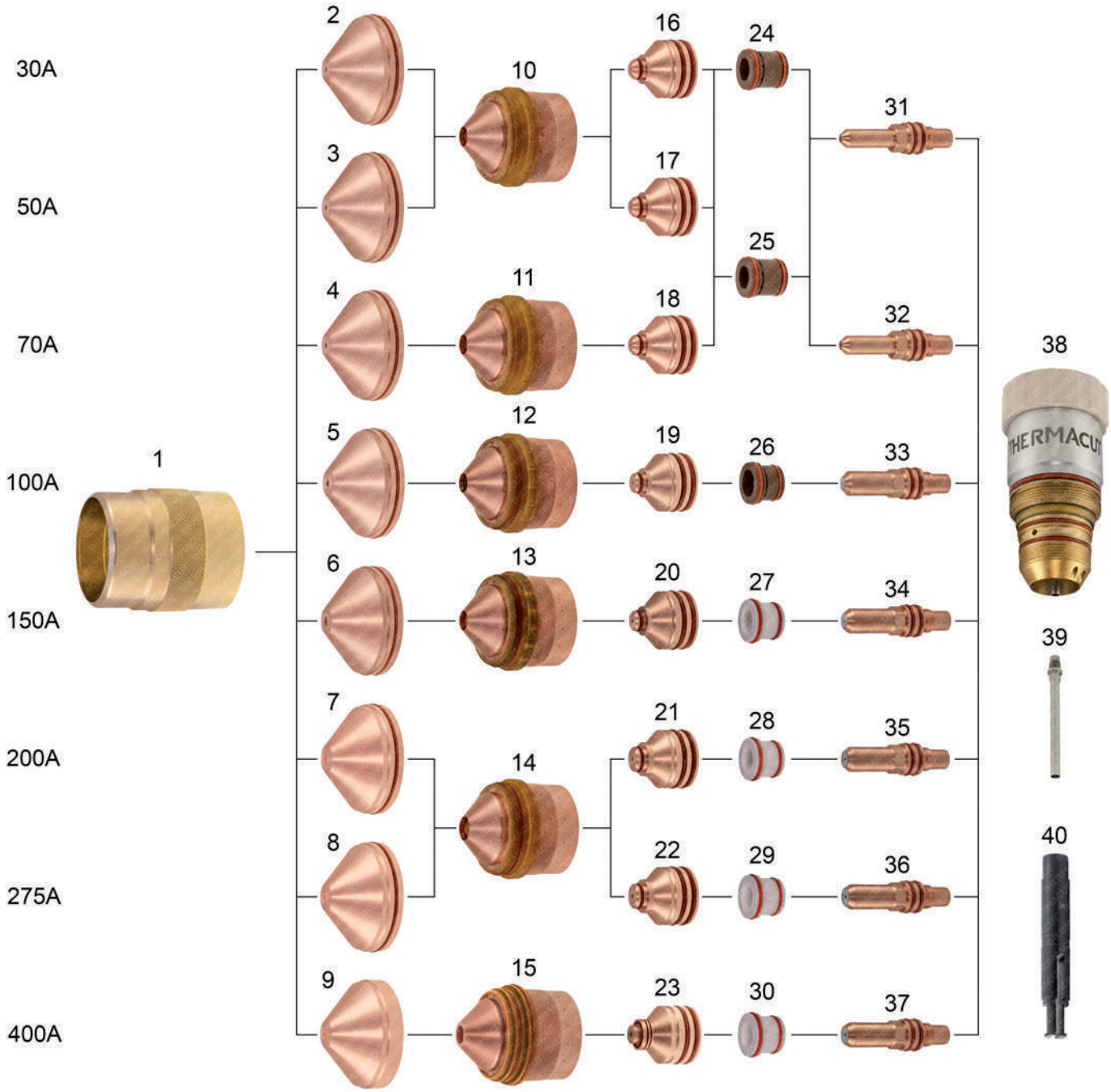

Last update of this page: 15/02/2018. See Revision history for details.

THERMACUT®, FHT-EX® AND EX-TRAFIRE® ARE REGISTERED TRADEMARKS OF THERMACUT, K.S. AND MAY BE REGISTERED IN CZECH REPUBLIC AND/OR OTHER COUNTRIES. ALL OTHER TRADEMARKS ARE PROPERTIES OF THEIR RESPECTIVE OWNERS. THERMACUT IS NO WAY AFFILIATED WITH KALIBURN®.
MOST THERMACUT PARTS ARE MADE FOR OR BY AN IBG COMPANY. PARTS INDICATED WITH A OEM ARE ORIGINAL PARTS MANUFACTURED BY THE ABOVE NAMED MANUFACTURER AND ARE BEING RESOLD BY THERMACUT. THERMACUT RESERVES THE RIGHT TO SUBSTITUTE OEM PARTS IN PLACE OF THERMACUT PARTS.
VALID FROM FEBRUARY 2018 • PREVIOUS VERSION IS NO LONGER VALID. • © COPYRIGHT 2018 BY THERMACUT® CZECH REPUBLIC. ALL RIGHTS RESERVED.

REPLACEMENT PARTS SUITABLE FOR
KALIBURN®

SPIRIT®, ProLine™
SPIRIT® 150a, 200a, 275a, 400a, ProLine™ 2150, 2200, 2260 stainless steel

PRODUCT BROCHURE WITH DETAILS AT
WWW.THERMACUT.COM

Item	Part No.	Ref. No.	Description	Std. Pkg.	Item	Part No.	Ref. No.	Description	Std. Pkg.
1.	T-11909	284150	Outer Retaining Cap 30–400A	1	21.	T-11884	277289	Nozzle 200A MS/SS/AL, Air	5
2.	T-12049	277144	Shield Cap 30A SS	1	22.	T-12056	277276	Nozzle 275A SS/AL	5
3.	T-12050	277149	Shield Cap 50A SS	1	23.	T-12057	284157	Nozzle 400A SS	5
4.	T-11901	277150	Shield Cap 70A MS/SS/AL	1	24.	T-12059	277138	Swirl Ring 30A SS	5
5.	T-11898	277286	Shield Cap 100A MS/SS/AL, Air	1	25.	T-11894	277142	Swirl Ring 50/70A MS/SS/AL	5
6.	T-11907	277117	Shield Cap 150A MS/SS/AL	1	26.	T-11893	277283	Swirl Ring 100A MS/SS/AL, Air	5
7.	T-11899	277274	Shield Cap 200A MS/SS/AL	1	*27.	T-11897	277139-UR	Swirl Ring 150A MS/SS/AL	5
8.	T-11900	277263	Shield Cap 275A MS/SS/AL	1	*28.	T-11896	277143-UR	Swirl Ring 200A MS/SS/AL	5
9.	T-12051	284155	Shield Cap 400A SS/AL	1	*29.	T-11895	277258-UR	Swirl Ring 275A MS/SS/AL	5
10.	T-12052	277110	Inner Retaining Cap 30–50A SS	1	*30.	T-12036	284122-UR	Swirl Ring 400A MS/SS/AL	5
11.	T-11891	277153	Inner Retaining Cap 70A MS/SS/AL	1	31.	T-12060	277137	Electrode 30/50A SS	1
12.	T-11908	277151	Inner Retaining Cap 100A MS/SS/AL	1	32.	T-11906	277131	Electrode 70A MS/SS/AL	5
13.	T-11890	277152	Inner Retaining Cap 150A MS/SS/AL	1	33.	T-11902	277282-PRO	Electrode 100A MS/SS/AL, Silver PRO	5
14.	T-11889	277266	Inner Retaining Cap 200/275A MS/SS/AL	1	34.	T-11904	277292-PRO	Electrode 150A MS/SS/AL, Silver PRO	5
15.	T-12053	284156	Inner Retaining Cap 400A SS/AL	1	35.	T-11903	277291-PRO	Electrode 200A MS/SS/AL, Silver PRO	5
16.	T-12054	277121	Nozzle 30A SS	5	36.	T-11905	277270-PRO	Electrode 275A MS/SS/AL, Silver PRO	5
17.	T-12055	277123	Nozzle 50A SS	5	37.	T-12061	284159	Electrode 400A SS/AL	1
18.	T-11887	277125	Nozzle 70A MS/SS/AL	5	38.	T-12182	279150	Torch Head	1
19.	T-11886	277284	Nozzle 100A MS/SS/AL, Air	5	39.	T-11944	277007	Cooling Tube	1
20.	T-11885	277293	Nozzle 150A MS/SS/AL, Air	5	40.	T-11322	12.40320	Wrench for Swirl Ring 150–400A	1

* FULLY INTERCHANGEABLE AND COMPATIBLE WITH ORIGINAL PARTS, BUT DIFFERS FROM ORIGINAL DESIGN

-PRO SILVER PRO TECHNOLOGY INCREASES ELECTRODE LIFETIME SIGNIFICANTLY COMPARED TO STANDARD COPPER ELECTRODES

Last update of this page: 15/02/2018. See Revision history for details.

THERMACUT®
THE CUTTING COMPANY®

WWW.THERMACUT.CZ
TEL.: +420 556 423 418
SALES@THERMACUT.CZ

WWW.THERMACUT.DE
TEL.: +49 (0) 27 39 40 33 0
INFO@THERMACUT.DE

WWW.THERMACUT.COM
TEL.: 1-603-542-6715
CUSTOMERSERVICE@THERMACUT.COM

THERMACUT®, FHT-EX® AND EX-TRAFIRE® ARE REGISTERED TRADEMARKS OF THERMACUT, K.S. AND MAY BE REGISTERED IN CZECH REPUBLIC AND/OR OTHER COUNTRIES. ALL OTHER TRADEMARKS ARE PROPERTIES OF THEIR RESPECTIVE OWNERS. THERMACUT IS NO WAY AFFILIATED WITH KALIBURN®.
MOST THERMACUT PARTS ARE MADE FOR OR BY AN IBG COMPANY. PARTS INDICATED WITH A OEM ARE ORIGINAL PARTS MANUFACTURED BY THE ABOVE NAMED MANUFACTURER AND ARE BEING RESOLD BY THERMACUT. THERMACUT RESERVES THE RIGHT TO SUBSTITUTE OEM PARTS IN PLACE OF THERMACUT PARTS.
VALID FROM FEBRUARY 2018 • PREVIOUS VERSION IS NO LONGER VALID. • © COPYRIGHT 2018 BY THERMACUT® CZECH REPUBLIC. ALL RIGHTS RESERVED.

REPLACEMENT PARTS SUITABLE FOR
KALIBURN®

SPIRIT®, ProLine™
SPIRIT® 150a, 200a, 275a, 400a, ProLine™ 2150, 2200, 2260 aluminium

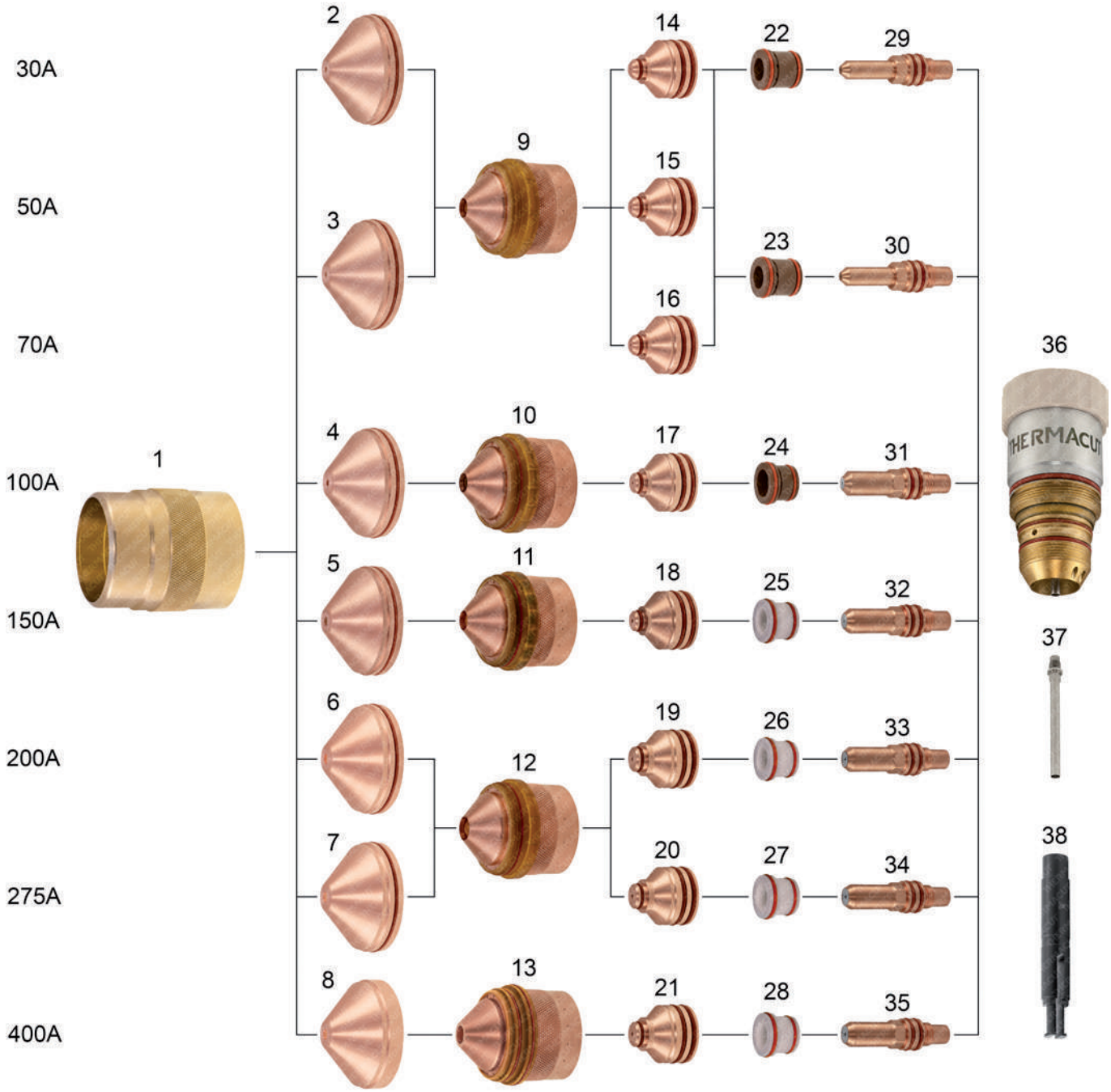

Last update of this page: 15/02/2018. See Revision history for details.

THERMACUT®
THE CUTTING COMPANY

WWW.THERMACUT.CZ
TEL.: +420 556 423 418
SALES@THERMACUT.CZ

WWW.THERMACUT.DE
TEL.: +49 (0) 27 39 40 33 0
INFO@THERMACUT.DE

WWW.THERMACUT.COM
TEL.: 1-603-542-6715
CUSTOMERSERVICE@THERMACUT.COM

THERMACUT®, FHT-EX® AND EX-TRAFIRE® ARE REGISTERED TRADEMARKS OF THERMACUT, K.S. AND MAY BE REGISTERED IN CZECH REPUBLIC AND/OR OTHER COUNTRIES. ALL OTHER TRADEMARKS ARE PROPERTIES OF THEIR RESPECTIVE OWNERS. THERMACUT IS NO WAY AFFILIATED WITH KALIBURN®.
MOST THERMACUT PARTS ARE MADE FOR OR BY AN IBG COMPANY. PARTS INDICATED WITH A OEM ARE ORIGINAL PARTS MANUFACTURED BY THE ABOVE NAMED MANUFACTURER AND ARE BEING RESOLD BY THERMACUT. THERMACUT RESERVES THE RIGHT TO SUBSTITUTE OEM PARTS IN PLACE OF THERMACUT PARTS.
VALID FROM FEBRUARY 2018 • PREVIOUS VERSION IS NO LONGER VALID. • © COPYRIGHT 2018 BY THERMACUT® CZECH REPUBLIC. ALL RIGHTS RESERVED.

REPLACEMENT PARTS SUITABLE FOR
KALIBURN®

SPIRIT®, ProLine™
SPIRIT® 150a, 200a, 275a, 400a, ProLine™ 2150, 2200, 2260 aluminium

PRODUCT BROCHURE WITH DETAILS AT
WWW.THERMACUT.COM

Item	Part No.	Ref. No.	Description	Std. Pkg.	Item	Part No.	Ref. No.	Description	Std. Pkg.
1.	T-11909	284150	Outer Retaining Cap 30–400A	1	20.	T-12056	277276	Nozzle 275A SS/AL	5
2.	T-12034	277145	Shield Cap 30A MS/AL	1	21.	T-12058	284158	Nozzle 400A AL	5
3.	T-11901	277150	Shield Cap 50/70A MS/SS/AL	1	22.	T-12033	277140	Swirl Ring 30A MS/SS/AL, H17	5
4.	T-11898	277286	Shield Cap 100A MS/SS/AL, Air	1	23.	T-11894	277142	Swirl Ring 50/70A MS/SS/AL	5
5.	T-11907	277117	Shield Cap 150A MS/SS/AL	1	24.	T-11893	277283	Swirl Ring 100A MS/SS/AL	5
6.	T-11899	277274	Shield Cap 200A MS/SS/AL	1	*25.	T-11897	277139-UR	Swirl Ring 150A MS/SS/AL	5
7.	T-11900	277263	Shield Cap 275A MS/SS/AL	1	*26.	T-11896	277143-UR	Swirl Ring 200A MS/SS/AL	5
8.	T-12051	284155	Shield Cap 400A SS/AL	1	*27.	T-11895	277258-UR	Swirl Ring 275A MS/SS/AL	5
9.	T-11891	277153	Inner Retaining Cap 30–70A MS/SS/AL	1	*28.	T-12036	284122-UR	Swirl Ring 400A MS/SS/AL	5
10.	T-11908	277151	Inner Retaining Cap 100A MS/SS/AL	1	29.	T-12032	277130	Electrode 30A MS/AL	1
11.	T-11890	277152	Inner Retaining Cap 150A MS/SS/AL	1	30.	T-11906	277131	Electrode 50/70A MS/SS/AL	5
12.	T-11889	277266	Inner Retaining Cap 200/275A MS/SS/AL	1	31.	T-11902	277282-PRO	Electrode 100A MS/SS/AL, Silver PRO	5
13.	T-12053	284156	Inner Retaining Cap 400A SS/AL	1	32.	T-11904	277292-PRO	Electrode 150A MS/SS/AL, Silver PRO	5
14.	T-12030	277120	Nozzle 30A MS/AL	5	33.	T-11903	277291-PRO	Electrode 200A MS/SS/AL, Silver PRO	5
15.	T-12031	277122	Nozzle 50A MS/AL	5	34.	T-11905	277270-PRO	Electrode 275A MS/SS/AL, Silver PRO	5
16.	T-11887	277125	Nozzle 70A MS/SS/AL	5	35.	T-12061	284159	Electrode 400A SS/AL	1
17.	T-11886	277284	Nozzle 100A MS/SS/AL, Air	5	36.	T-12182	279150	Torch Head	1
18.	T-11885	277293	Nozzle 150A MS/SS/AL, Air	5	37.	T-11944	277007	Cooling Tube	1
19.	T-11884	277289	Nozzle 200A MS/SS/AL, Air	5	38.	T-11322	12.40320	Wrench for Swirl Ring 150–400A	1

* FULLY INTERCHANGEABLE AND COMPATIBLE WITH ORIGINAL PARTS, BUT DIFFERS FROM ORIGINAL DESIGN

-PRO SILVER PRO TECHNOLOGY INCREASES ELECTRODE LIFETIME SIGNIFICANTLY COMPARED TO STANDARD COPPER ELECTRODES

Last update of this page: 15/02/2018. See Revision history for details.

THERMACUT®, FHT-EX® AND EX-TRAFIRE® ARE REGISTERED TRADEMARKS OF THERMACUT, K.S. AND MAY BE REGISTERED IN CZECH REPUBLIC AND/OR OTHER COUNTRIES. ALL OTHER TRADEMARKS ARE PROPERTIES OF THEIR RESPECTIVE OWNERS. THERMACUT IS NO WAY AFFILIATED WITH KALIBURN®.
MOST THERMACUT PARTS ARE MADE FOR OR BY AN IBG COMPANY. PARTS INDICATED WITH A OEM ARE ORIGINAL PARTS MANUFACTURED BY THE ABOVE NAMED MANUFACTURER AND ARE BEING RESOLD BY THERMACUT. THERMACUT RESERVES THE RIGHT TO SUBSTITUTE OEM PARTS IN PLACE OF THERMACUT PARTS.
VALID FROM FEBRUARY 2018 • PREVIOUS VERSION IS NO LONGER VALID. • © COPYRIGHT 2018 BY THERMACUT® CZECH REPUBLIC. ALL RIGHTS RESERVED.

REPLACEMENT PARTS SUITABLE FOR
KJELLBERG®

PA-S20W™, PA-S25W™, PA-S40W™, PA-S45W™, PA-S70W™
PB-S45W™

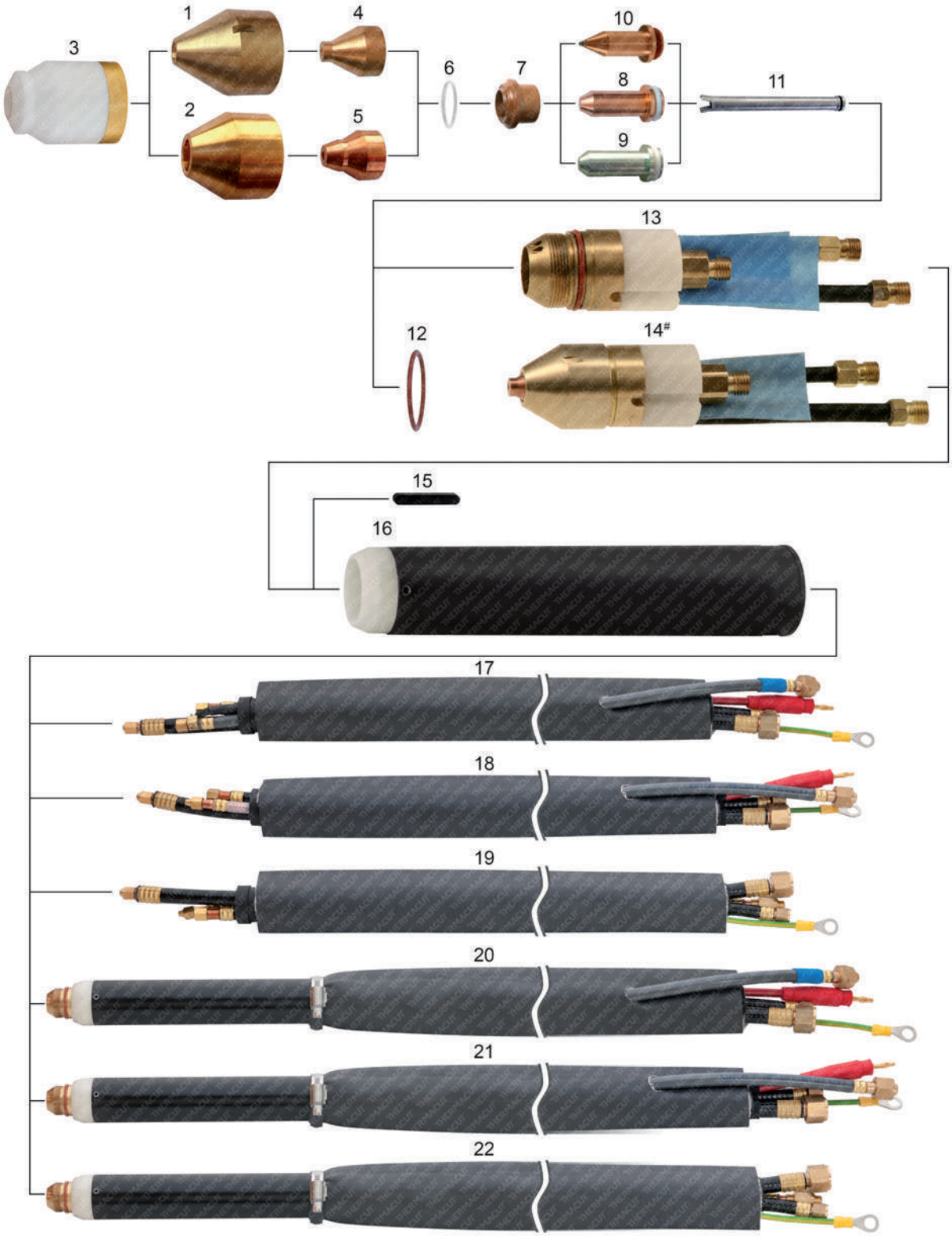

Last update of this page: 18/05/2017. See Revision history for details.

THERMACUT®
THE CUTTING COMPANY

WWW.THERMACUT.CZ
TEL.: +420 556 423 418
SALES@THERMACUT.CZ

WWW.THERMACUT.DE
TEL.: +49 (0) 27 39 40 33 0
INFO@THERMACUT.DE

WWW.THERMACUT.COM
TEL.: 1-603-542-6715
CUSTOMERSERVICE@THERMACUT.COM

THERMACUT®, FHT-EX® AND EX-TRAFIRE® ARE REGISTERED TRADEMARKS OF THERMACUT, K.S. AND MAY BE REGISTERED IN CZECH REPUBLIC AND/OR OTHER COUNTRIES. ALL OTHER TRADEMARKS ARE PROPERTIES OF THEIR RESPECTIVE OWNERS. THERMACUT IS NO WAY AFFILIATED WITH KJELLBERG®.
MOST THERMACUT PARTS ARE MADE FOR OR BY AN IBG COMPANY. PARTS INDICATED WITH A OEM ARE ORIGINAL PARTS MANUFACTURED BY THE ABOVE NAMED MANUFACTURER AND ARE BEING RESOLD BY THERMACUT. THERMACUT RESERVES THE RIGHT TO SUBSTITUTE OEM PARTS IN PLACE OF THERMACUT PARTS.
VALID FROM FEBRUARY 2018 • PREVIOUS VERSION IS NO LONGER VALID. • © COPYRIGHT 2018 BY THERMACUT® CZECH REPUBLIC. ALL RIGHTS RESERVED.

REPLACEMENT PARTS SUITABLE FOR
KJELLBERG®

PA-S20W™, PA-S25W™, PA-S40W™, PA-S45W™, PA-S70W™
PB-S45W™

Item	Part No.	Ref. No.	Sh.Ref.No.	Description	Std.Pkg.
1.	T-8609	11.828.201.151		Nose Cap 6,0	1
2.	T-8617	11.830.301.151		Nose Cap 9,6	1
3.	T-10040	11.828.101.160		Protection Cap, Hand	1
4.	T-8611	11.828.201.410	Ll	Nozzle 1,0mm, Air, 45A	5
	T-8612	11.828.201.413	Ld	Nozzle 1,3mm, Air, 90A	5
	T-8613	11.828.201.414	Le	Nozzle 1,4mm, Air, 120A	10
5.	T-8614	11.828.203.410	Lle	Nozzle 1,0mm, Lle, Air, 45A	10
	T-8615	11.828.203.413	Lde	Nozzle 1,3mm, Lde, Air, 90A	10
	T-8616	11.828.203.414	Lee	Nozzle 1,4mm, Lee, Air, 130A	10
	T-8736	11.828.213.613	Ade	Nozzle, 1,3mm ArH_2, 80A	10
	T-8737	11.828.213.614	Aee	Nozzle, 1,4mm ArH_2, 100A	5
	T-8738	11.828.213.616	Afe	Nozzle, 1,6mm ArH_2, 130A	5
	T-8620	11.834.321.410	Lle-XL	Nozzle 1,0 45A O_2	10
	T-8621	11.834.321.413	Lde-XL	Nozzle 1,3 90A O_2	10
	T-8622	11.834.321.414	Lee-XL	Nozzle 1,4 130A O_2	10
6.	T-8601	10.575.036		O-Ring	1
7.	T-8604	11.828.001.153	Z111	Swirl Ring	1
	T-10794	11.828.001.153K	Z111	Swirl Ring, Ceramic	1
8.	T-8605	11.828.001.3001	Kb	Cathode	5
9.	T-4921	11.834.321.3001-AG		Cathode, SilverEX-®	5
10.	T-8735	11.828.211.5001	Ka	Cathode ArH_2 (i)	5
11.	T-8603	11.828.001.152		Cooling Tube	1
12.	T-8602	10.575.052		O-Ring	1
13.	T-8926	11.828.301.100		Torch Body, Machine	1
#14.	T-8607#	11.828.201.100		Complete Torch, Machine	1

Item	Part No.	Ref. No.	Sh.Ref.No.	Description	Std. Pkg.
NS	T-8710	11.828.001.820 OEM		Cathode Tool	1
NS	T-11572	11.828.001.810 OEM		Nose Cap Tool	1
15.	PT-12482	11.828.201.250-3		Tube Pin	1
16.	T-8610	11.828.201.250		Tube complete, incl.pos.15	1
17.	KT-1068	11.832.521.701		Cable Leads 10m PB-S45W-1/O_2	1
	KT-1449	K.PB-S45W-1O2.15M.K		Cable Leads 15m PB-S45W-1/O_2	1
18.	KT-1468	11.832.501.701		Cable Leads 10m PB-S45W-1/L	1
	KT-1373	K.PB-S45W-1L.15M.K		Cable Leads 15m PB-S45W-1/L	1
19.	KT-1473	11.831.601.700		Cable Leads 6m PB-S45WH/L	1
	KT-1296	11.832.401.701		Cable Leads 10m PB-S45W/L	1
	KT-1322	K.PB-S45W-L.15M.K		Cable Leads 15m PB-S45W/L	1
20.	KT-1208	11.832.521.006		Torch with Leads 6m PB-S45W-1/O_2	1
	KT-1255	11.832.521.010		Torch with Leads 10m PB-S45W-1/O_2	1
	KT-1490	K.PB-S45W-1L-O2.15M		Torch with Leads 15m PB-S45W-1/O_2	1
21.	KT-1413	11.832.501.006		Torch with Leads 6m PB-S45W-1/L	1
	KT-1254	11.832.501.010		Torch with Leads 10m PB-S45W-1/L	1
	KT-1272	K.PB-S45W-1L.15M		Torch with Leads 15m PB-S45W-1/L	1
	KT-1230	11.832.501.1015		Torch with Leads 1,5m PB-S45W-1/L	1
22.	KT-1402	11.832.401.006		Torch with Leads 6m PB-S45W/L	1
	KT-1116	11.832.401.010		Torch with Leads 10m PB-S45W/L	1
	KT-1054	K.PB-S45W-L.15M		Torch with Leads 15m PB-S45W/L	1
	KT-1356	K.PB-S45W-L.20M		Torch with Leads 20m PB-S45W/L	1
NS	KT-1417	K.PB-S45W-1L-O_2.20M		Torch with Leads 20m PB-S45W/L-1/O_2	1
	Different types of cable leads available on request				

(i) THIS PART MAY NOT BE DISTRIBUTED ON THE GERMAN MARKET. THERMACUT ACCEPTS NO RESPONSIBILITY IN CASE OF INDIRECT SALES TO GERMANY.

INCLUDING PARTS: TORCH 11.828.301.100, ELECTRODE 11.828.001.3001, SWIRL RING 11.828.001.153, O-RING 10.575.036, NOZZLE 11.828.203.413, NOSE CAP 11.830.301.151

NS NOT SHOWN IN THE PICTURE

Last update of this page: 18/05/2017. See Revision history for details.

THERMACUT®, FHT-EX® AND EX-TRAFIRE® ARE REGISTERED TRADEMARKS OF THERMACUT, K.S. AND MAY BE REGISTERED IN CZECH REPUBLIC AND/OR OTHER COUNTRIES. ALL OTHER TRADEMARKS ARE PROPERTIES OF THEIR RESPECTIVE OWNERS. THERMACUT IS NO WAY AFFILIATED WITH KJELLBERG®.
MOST THERMACUT PARTS ARE MADE FOR OR BY AN IBG COMPANY. PARTS INDICATED WITH A OEM ARE ORIGINAL PARTS MANUFACTURED BY THE ABOVE NAMED MANUFACTURER AND ARE BEING RESOLD BY THERMACUT. THERMACUT RESERVES THE RIGHT TO SUBSTITUTE OEM PARTS IN PLACE OF THERMACUT PARTS.
VALID FROM FEBRUARY 2018 • PREVIOUS VERSION IS NO LONGER VALID. • © COPYRIGHT 2018 BY THERMACUT® CZECH REPUBLIC. ALL RIGHTS RESERVED.

REPLACEMENT PARTS SUITABLE FOR
KJELLBERG®

FineFocus® 450
PB-S47™ W - 1 / O_2

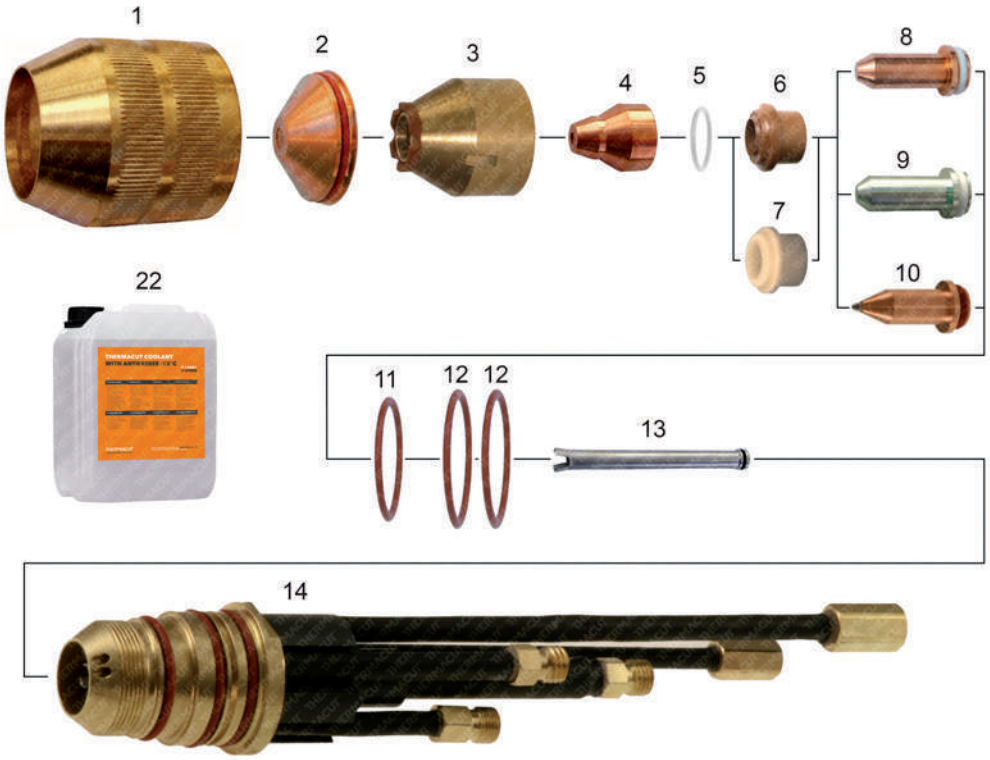

1:3

Last update of this page: 11/11/2017. See Revision history for details.

THERMACUT®, FHT-EX® AND EX-TRAFIRE® ARE REGISTERED TRADEMARKS OF THERMACUT, K.S. AND MAY BE REGISTERED IN CZECH REPUBLIC AND/OR OTHER COUNTRIES. ALL OTHER TRADEMARKS ARE PROPERTIES OF THEIR RESPECTIVE OWNERS. THERMACUT IS NO WAY AFFILIATED WITH KJELLBERG®.
MOST THERMACUT PARTS ARE MADE FOR OR BY AN IBG COMPANY. PARTS INDICATED WITH A OEM ARE ORIGINAL PARTS MANUFACTURED BY THE ABOVE NAMED MANUFACTURER AND ARE BEING RESOLD BY THERMACUT. THERMACUT RESERVES THE RIGHT TO SUBSTITUTE OEM PARTS IN PLACE OF THERMACUT PARTS.
VALID FROM FEBRUARY 2018 • PREVIOUS VERSION IS NO LONGER VALID. • © COPYRIGHT 2018 BY THERMACUT® CZECH REPUBLIC. ALL RIGHTS RESERVED.

REPLACEMENT PARTS SUITABLE FOR
KJELLBERG®

FineFocus® 450
PB-S47™ W - 1 / O_2

Item	Part No.	Ref. No.	Sh.Ref.No.	Description	Std.Pkg.
1.	T-8641	11.832.201.081	W501	Protection Cap	1
2.	T-8642	11.832.201.1561	W4130	Swirl Gas Cup 3,0	10
	T-8643	11.832.201.1571	W4140	Swirl Gas Cup 4,0	10
3.	T-8644	11.832.201.160	W3030	Nozzle Cap	1
4.	T-8614	11.828.203.410	Lle	Nozzle 1.0mm, Lle, Air, 45A	10
	T-8615	11.828.203.413	Lde	Nozzle 1.3mm, Lde, Air, 90A	10
	T-8616	11.828.203.414	Lee	Nozzle 1.4mm, Lee, Air, 130A	10
	T-8620	11.834.321.410	Lle-XL	Nozzle 1.0mm, O_2, 45A	10
	T-8621	11.834.321.413	Lde-XL	Nozzle 1.3mm, O_2, 90A	10
	T-8622	11.834.321.414	Lee-XL	Nozzle 1.4mm, O_2, 130A	10
	T-8736	11.828.213.613	Ade	Nozzle 1.3mm, ArH_2, 80A	10
	T-8737	11.828.213.614	Aee	Nozzle 1.4mm, ArH_2, 100A	5
	T-8738	11.828.213.616	Afe	Nozzle 1.6mm, ArH_2, 130A	5
5.	T-8601	10.575.036		O-Ring	1
6.	T-8618	11.834.321.153	Z111	Swirl Ring	1
7.	T-9287	11.834.321.153K	Z111	Swirl Ring - ceramic	1
8.	T-8619	11.834.321.3001	Kb-XL	Cathode	5
9.	T-4921	11.834.321.3001-AG	Kb-XL	Cathode, SilverEX-®	5

Item	Part No.	Ref. No.	Sh.Ref.No.	Description	Std. Pkg.
10.	T-8735	11.828.211.5001	Ka	Cathode, ArH_2 (i)	5
11.	T-8602	10.575.052		O-Ring	1
12.	T-8647	10.505.915		O-Ring	1
13.	PT-10232	11.832.201.152	W901	Cooling Tube	1
14.	T-8649	11.832.221.100		Torch Body, Machine	1
15.	T-8648	10.505.948		O-Ring	1
16.	T-10193	11.832.221.100-10		Tube Adaptor	1
17.	T-10925	11.832.201.077		Clamping Bush	1
18.	T-10924	11.832.201.076		Outer Bush	1
19.	T-10772	11.834.321.250		Tube PB-S47W™	1
20.	KT-1155	11.834.721.1015		Torch with Leads 1.5m 2/O_2	1
21.	KT-1056	11.834.321.006		Torch with Leads 6m 1/O_2	1
	KT-1422	11.834.321.010		Torch with Leads 10m 1/O_2	1
	KT-1102	11.834.321.015		Torch with Leads 15m 1/O_2	1
	KT-1127	K.PB-S47W.20M		Torch with Leads 20m 1/O_2	1
NS	KT-1470	11.834.321.701A		PB-S47W™ Cable Leads 15m 1/O_2	1
22.	Coolant Liquid. Details on the page 144, section Accessories.				

(i) THIS PART MAY NOT BE DISTRIBUTED ON THE GERMAN MARKET. THERMACUT ACCEPTS NO RESPONSIBILITY IN CASE OF INDIRECT SALES TO GERMANY.

Last update of this page: 11/11/2017. See Revision history for details.

THERMACUT®, FHT-EX® AND EX-TRAFIRE® ARE REGISTERED TRADEMARKS OF THERMACUT, K.S. AND MAY BE REGISTERED IN CZECH REPUBLIC AND/OR OTHER COUNTRIES. ALL OTHER TRADEMARKS ARE PROPERTIES OF THEIR RESPECTIVE OWNERS. THERMACUT IS NO WAY AFFILIATED WITH KJELLBERG®.
MOST THERMACUT PARTS ARE MADE FOR OR BY AN IBG COMPANY. PARTS INDICATED WITH A OEM ARE ORIGINAL PARTS MANUFACTURED BY THE ABOVE NAMED MANUFACTURER AND ARE BEING RESOLD BY THERMACUT. THERMACUT RESERVES THE RIGHT TO SUBSTITUTE OEM PARTS IN PLACE OF THERMACUT PARTS.
VALID FROM FEBRUARY 2018 • PREVIOUS VERSION IS NO LONGER VALID. • © COPYRIGHT 2018 BY THERMACUT® CZECH REPUBLIC. ALL RIGHTS RESERVED.

REPLACEMENT PARTS SUITABLE FOR
KJELLBERG®

HiFocus® 100
PerCut® 100, PerCut® 101

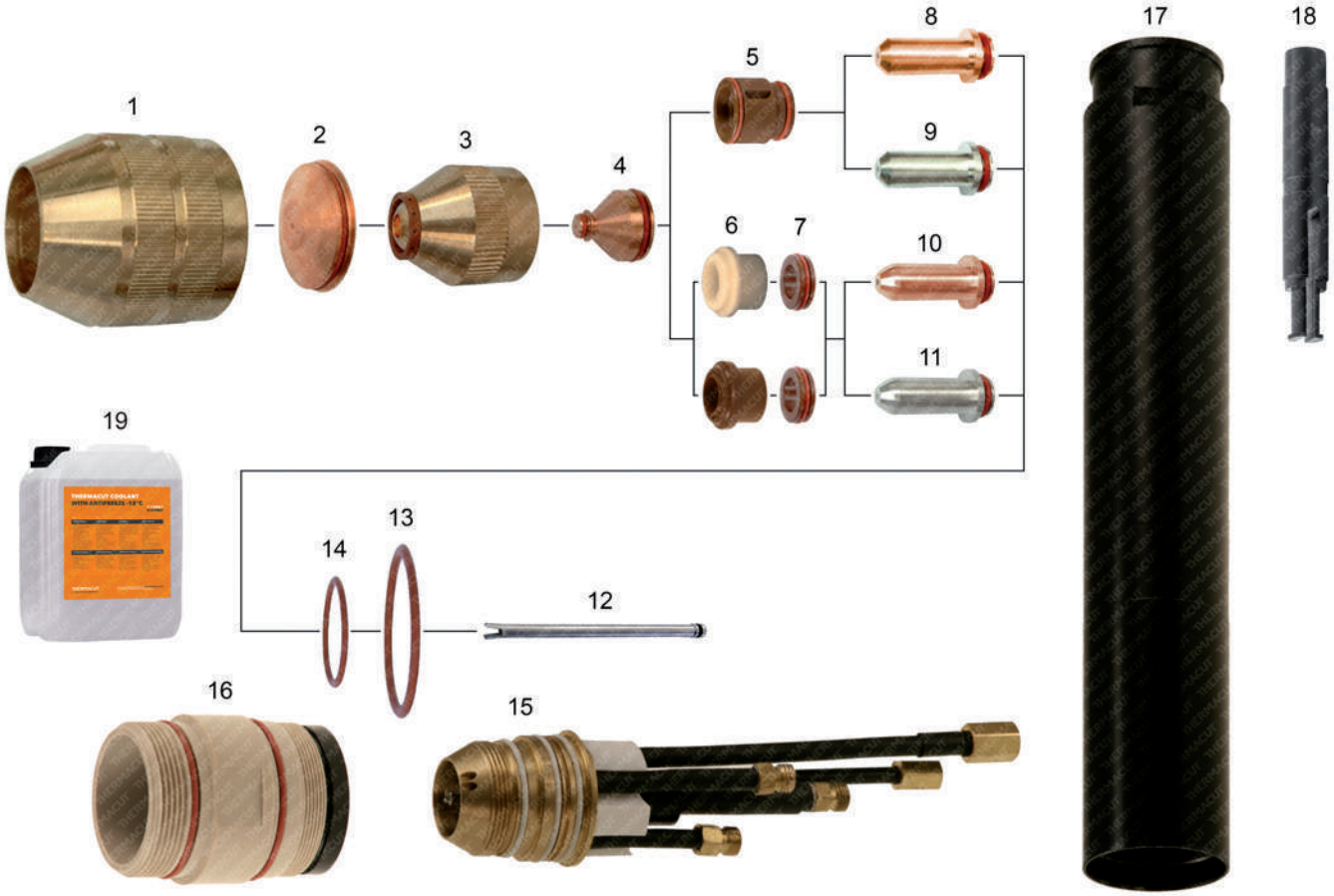

Last update of this page: 07/09/2017. See Revision history for details.

THERMACUT®
THE CUTTING COMPANY

WWW.THERMACUT.CZ
TEL.: +420 556 423 418
SALES@THERMACUT.CZ

WWW.THERMACUT.DE
TEL.: +49 (0) 27 39 40 33 0
INFO@THERMACUT.DE

WWW.THERMACUT.COM
TEL.: 1-603-542-6715
CUSTOMERSERVICE@THERMACUT.COM

THERMACUT®, FHT-EX® AND EX-TRAFIRE® ARE REGISTERED TRADEMARKS OF THERMACUT, K.S. AND MAY BE REGISTERED IN CZECH REPUBLIC AND/OR OTHER COUNTRIES. ALL OTHER TRADEMARKS ARE PROPERTIES OF THEIR RESPECTIVE OWNERS. THERMACUT IS NO WAY AFFILIATED WITH KJELLBERG®.
MOST THERMACUT PARTS ARE MADE FOR OR BY AN IBG COMPANY. PARTS INDICATED WITH A OEM ARE ORIGINAL PARTS MANUFACTURED BY THE ABOVE NAMED MANUFACTURER AND ARE BEING RESOLD BY THERMACUT. THERMACUT RESERVES THE RIGHT TO SUBSTITUTE OEM PARTS IN PLACE OF THERMACUT PARTS.
VALID FROM FEBRUARY 2018 • PREVIOUS VERSION IS NO LONGER VALID. • © COPYRIGHT 2018 BY THERMACUT® CZECH REPUBLIC. ALL RIGHTS RESERVED.

REPLACEMENT PARTS SUITABLE FOR
KJELLBERG®

HiFocus® 100
PerCut® 100, PerCut® 101

Item	Part No.	Ref. No.	Sh.Ref.No.	Description	Std. Pkg.
1.	T-8630	11.835.201.081	Z501	Protection Cap	1
2.	T-8631	11.835.201.1561	Z4015	Swirl Gas Cap 1,5	10
	T-8632	11.835.201.1571	Z4020	Swirl Gas Cap 2,0	10
	T-8633	11.835.201.1581	Z4025	Swirl Gas Cap 2,5	10
	T-8634	11.835.201.1591	Z4030	Swirl Gas Cap 3,0	10
	T-8650	11.835.401.1571	Z4140	Swirl Gas Cap 4,0	10
	T-9928	11.835.411.1581	Z4530	Swirl Gas Cap 3,0	10
	T-9929	11.835.411.1591	Z4540	Swirl Gas Cap 4,0	10
	T-10154	11.835.411.1590	Z4545	Swirl Gas Cap 4,5	1
3.	T-8635	11.835.201.160	Z3004	Nozzle Cap 0,4	1
	T-8636	11.835.201.162	Z3008	Nozzle Cap 0,8	1
4.	T-8625	11.835.221.406	Z2006	Nozzle 0,6 25A	5
	T-8626	11.835.221.407	Z2007	Nozzle 0,7 35A	10
	T-8627	11.835.221.408	Z2008	Nozzle 0,8 50/60A	10
	T-8628	11.835.221.410	Z2010	Nozzle 1,0 80/90A	10
	T-8929	11.835.221.411	Z2011	Nozzle 1,1 90/100A	10
	T-8629	11.835.221.412	Z2012	Nozzle 1,2 100A	10
	T-8637	11.835.221.414	Z2014	Nozzle 1,4 130A	10
	T-8651	11.835.421.412	Z2112	Nozzle 1,2 100A	10
	T-8652	11.835.421.414	Z2114	Nozzle 1,4 130A	10
NS	T-10417	11.835.411.614 OEM	Z2514	Nozzle 1,4 120A	1
NS	T-10054	11.835.411.616 OEM	Z2516	Nozzle 1,6 130A	1
5.	T-8623	11.835.221.153	Z101	Swirl Ring 0,4 (3xcw)	1
	T-8886	11.835.221.154	Z102	Swirl Ring 0,4 (2xcw)	1
6.	T-9287	11.834.321.153K	Z111	Swirl Ring – ceramic	1

Item	Part No.	Ref. No.	Sh.Ref.No.	Description	Std. Pkg.
	T-8618	11.834.321.153	Z111	Swirl Ring – vespel	1
7.	T-8655	11.835.421.303	Z111A	Spacer	2
8.	T-8624	11.835.221.3101	Z002Cu	Cathode, O_2 XL – copper (i)	5
9.	T-4922	11.835.221.3101-AG	Z002	Cathode, O_2 XL – SilverEX.®	5
10.	T-8653	11.835.421.3101-PRO	Z012Cu	Cathode, O_2 XL – Silver PRO	5
11.	T-4923	11.835.421.3101-AG	Z012	Cathode, O_2 XL – SilverEX.®	5
NS	T-10196	11.835.211.5101 OEM	Z042	Cathode HiFinox™	5
NS	T-10053	11.835.411.5101 OEM	Z052	Cathode HiFinox™	5
12.	T-8638	11.835.201.152	Z901	Cooling Tube	1
13.	T-8640	10.505.946		O-Ring	1
14.	N-10040	10.505.916		O-Ring	1
15.	T-8654	11.835.221.100		Torch Body, Mach.(incl.cooling tube)	1
16.	T-10282	11.842.221.100-10		Tube Adaptor	1
17.	T-9857	11.842.421.250		Tube D44-295	1
NS	T-10164	11.843.001.810 OEM		Nozzle Tool	1
NS	T-10163	11.835.221.820 OEM		Cathode Tool	1
NS	T-9755	11.835.201.077		Clamping Bush	1
NS	T-9756	11.835.201.076		Outer Bush	1
NS	KT-1203	11.838.221.1015		PerCut® 101-2 Torch with Leads, 1,75m	1
NS	KT-1185	11.838.421.700		PerCut® 101-1 Cable Leads, 6m	1
NS	KT-1135	11.838.421.702		PerCut® 101-1 Cable Leads, 15m	1
NS	KT-1410	11.838.221.103		PerCut® 101-2 Torch with Leads, 3m	1
18.	T-11322	12.40320		Wrench for Swirl Ring	1
19.	Coolant Liquid. Details on the page 144, section Accessories.				

(i) THIS PART MAY NOT BE DISTRIBUTED ON THE GERMAN, ITALIAN, FRENCH AND GREAT BRITAIN MARKET. THERMACUT ACCEPTS NO RESPONSIBILITY IN CASE OF INDIRECT SALES TO GERMANY, ITALY, FRANCE AND GREAT BRITAIN.

NS NOT SHOWN IN THE PICTURE

-PRO TECHNOLOGY OF SILVER INSERTED COPPER ELECTRODE BODY, WHICH SIGNIFICANTLY DECREASES ELECTRODE COSTS WITH SIMILAR WORK PERFORMANCE COMPARED TO FULL SILVER ELECTRODES.

Last update of this page: 07/09/2017. See Revision history for details.

THERMACUT®, FHT-EX® AND EX-TRAFIRE® ARE REGISTERED TRADEMARKS OF THERMACUT, K.S. AND MAY BE REGISTERED IN CZECH REPUBLIC AND/OR OTHER COUNTRIES. ALL OTHER TRADEMARKS ARE PROPERTIES OF THEIR RESPECTIVE OWNERS. THERMACUT IS NO WAY AFFILIATED WITH KJELLBERG®.
MOST THERMACUT PARTS ARE MADE FOR OR BY AN IBG COMPANY. PARTS INDICATED WITH A OEM ARE ORIGINAL PARTS MANUFACTURED BY THE ABOVE NAMED MANUFACTURER AND ARE BEING RESOLD BY THERMACUT. THERMACUT RESERVES THE RIGHT TO SUBSTITUTE OEM PARTS IN PLACE OF THERMACUT PARTS.
VALID FROM FEBRUARY 2018 • PREVIOUS VERSION IS NO LONGER VALID. • © COPYRIGHT 2018 BY THERMACUT® CZECH REPUBLIC. ALL RIGHTS RESERVED.

REPLACEMENT PARTS SUITABLE FOR
KJELLBERG®

HiFocus® 160i
PerCut® 160 / PerCut® 170

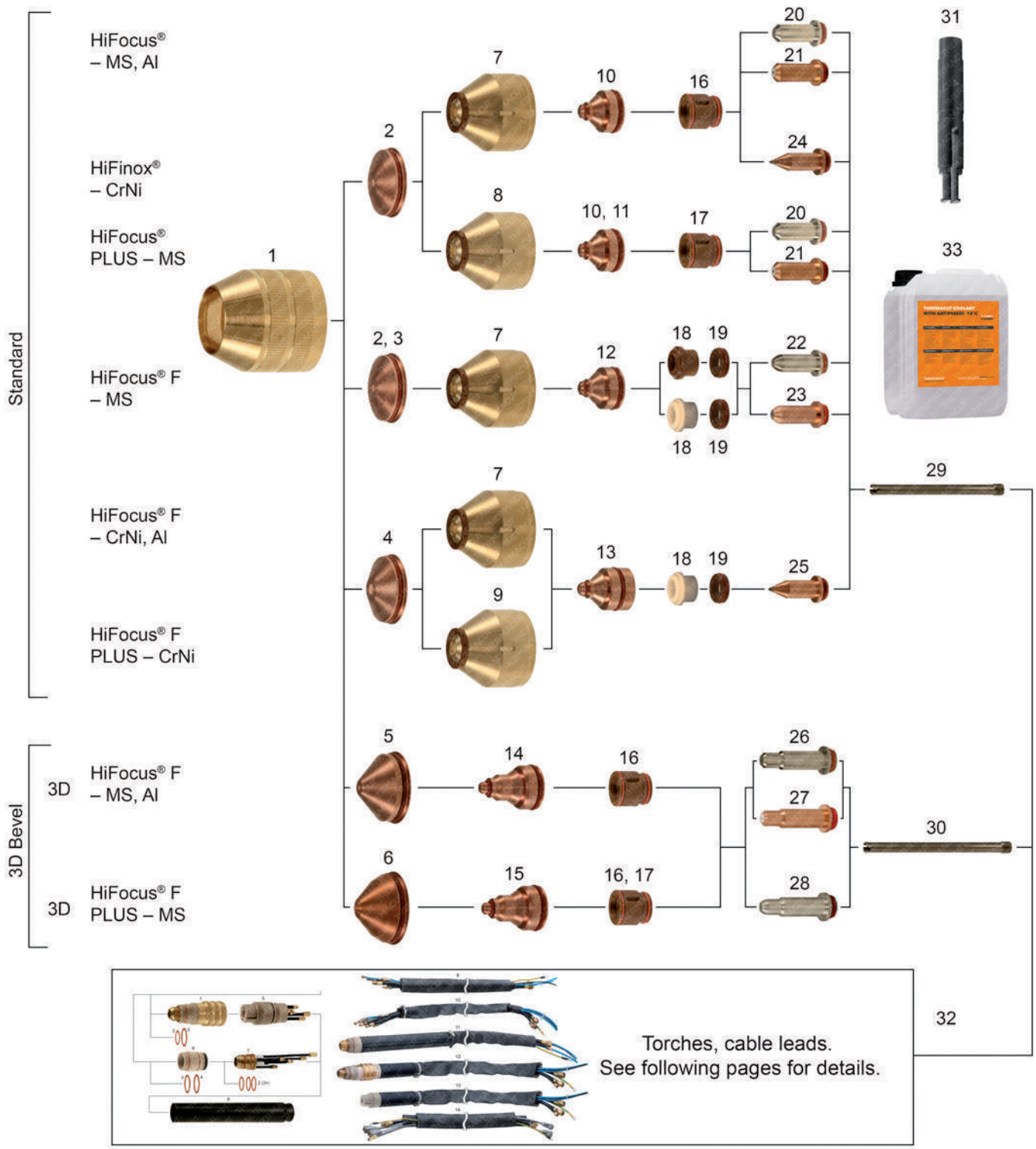

Last update of this page: 07/09/2017. See Revision history for details.

THERMACUT®, FHT-EX® AND EX-TRAFIRE® ARE REGISTERED TRADEMARKS OF THERMACUT, K.S. AND MAY BE REGISTERED IN CZECH REPUBLIC AND/OR OTHER COUNTRIES. ALL OTHER TRADEMARKS ARE PROPERTIES OF THEIR RESPECTIVE OWNERS. THERMACUT IS NO WAY AFFILIATED WITH KJELLBERG®.
MOST THERMACUT PARTS ARE MADE FOR OR BY AN IBG COMPANY. PARTS INDICATED WITH A OEM ARE ORIGINAL PARTS MANUFACTURED BY THE ABOVE NAMED MANUFACTURER AND ARE BEING RESOLD BY THERMACUT. THERMACUT RESERVES THE RIGHT TO SUBSTITUTE OEM PARTS IN PLACE OF THERMACUT PARTS.
VALID FROM FEBRUARY 2018 • PREVIOUS VERSION IS NO LONGER VALID. • © COPYRIGHT 2018 BY THERMACUT® CZECH REPUBLIC. ALL RIGHTS RESERVED.

REPLACEMENT PARTS SUITABLE FOR
KJELLBERG®

HiFocus® 160i
PerCut® 160 / PerCut® 170

PRODUCT BROCHURE WITH DETAILS AT
WWW.THERMACUT.COM

Item	Part No.	Ref. No.	Sh.Ref.No.	Description	Std. Pkg.
1.	T-8630	11.835.201.081	Z501	Protection Cap	1
2.	T-8631	11.835.201.1561	Z4015	Swirl Gas Cap 1,5	10
	T-8632	11.835.201.1571	Z4020	Swirl Gas Cap 2,0	10
	T-8885	11.835.201.1551	Z4022	Swirl Gas Cap 2,2	10
	T-8633	11.835.201.1581	Z4025	Swirl Gas Cap 2,5	10
	T-8634	11.835.201.1591	Z4030	Swirl Gas Cap 3,0	10
3.	T-8650	11.835.401.1571	Z4140	Swirl Gas Cap 4,0	10
4.	T-9928	11.835.411.1581	Z4530	Swirl Gas Cap 3,0	10
	T-10153	11.835.411.1580	Z4535	Swirl Gas Cap 3,5	1
	T-9929	11.835.411.1591	Z4540	Swirl Gas Cap 4,0	10
5.	T-10299	11.838.001.1561	Y4015	Swirl Gas Cap 1,5 (3D)	1
	T-10279	11.838.001.1571	Y4020	Swirl Gas Cap 2,0 (3D)	5
6.	T-10294	11.842.601.157	R4020	Swirl Gas Cap 2,0 (3D)	5
	T-10278	11.842.601.155	R4022	Swirl Gas Cap 2,2 (3D)	5
	T-10280	11.842.601.158	R4025	Swirl Gas Cap 2,5 (3D)	5
	T-10303	11.842.701.158	R4130	Swirl Gas Cap 3,0 (3D)	5
	T-10302	11.842.701.159	R4140	Swirl Gas Cap 4,0 (3D)	5
7.	T-8887	11.842.401.160	S3004	Nozzle Cap 0,4	1
	T-8888	11.842.401.162	S3008	Nozzle Cap 0,8	1
8.	T-8889	11.842.401.1622	S3028	Nozzle Cap 0,8	1
	T-10208	11.842.401.1624	S3048	Nozzle Cap 0,8	1
9.	T-10328	11.842.401.1621	S3018	Nozzle Cap 0,8	1
NS	T-10249	11.842.601.160 OEM	R3004	Nozzle Cap 0,4	1
NS	T-10298	11.842.601.162 OEM	R3008	Nozzle Cap 0,8	1
NS	T-10250	11.842.601.1621 OEM	R3018	Nozzle Cap 0,8 (3D)	1
NS	T-10251	11.842.601.1622 OEM	R3028	Nozzle Cap 0,8 (3D)	1
10.	T-10000	11.843.021.406	S2006X	Nozzle 0,6 25A	10
	T-10001	11.843.021.407	S2007X	Nozzle 0,7 35A	10
11.	T-10002	11.843.021.408	S2008X	Nozzle 0,8 50/60A	10
	T-10003	11.843.021.409	S2009X	Nozzle 0,9 70/80A	10
	T-10004	11.843.021.410	S2010X	Nozzle 1,0 80/90A	10
	T-9699	11.843.021.411	S2011X	Nozzle 1,1 90/100A	10
	T-10005	11.843.021.412	S2012X	Nozzle 1,2 100/130A	10
	T-10006	11.843.021.414	S2014X	Nozzle 1,4 130/160A	10

Item	Part No.	Ref. No.	Sh.Ref.No.	Description	Std. Pkg.
	T-10007	11.843.021.416	S2016X	Nozzle 1,6 160A	10
12.	T-10008	11.843.121.412	S2112X	Nozzle 1,2 100A	10
	T-10009	11.843.121.414	S2114X	Nozzle 1,4 130A	10
	T-10010	11.843.121.416	S2116X	Nozzle 1,6 160A	10
13.	T-10011	11.843.111.614	S2514X	Nozzle 1,4 120A	5
	T-9926	11.843.111.616	S2516X	Nozzle 1,6 140A	5
	T-9927	11.843.111.618	S2518X	Nozzle 1,8 160A	5
14.	T-10272	11.842.621.407	R2007	Nozzle 0,7 35A (3D)	10
15.	T-10252	11.842.621.408	R2008	Nozzle 0,8 50A (3D)	10
	T-10273	11.842.621.409	R2009	Nozzle 0,9 70A (3D)	5
	T-10274	11.842.621.410	R2010	Nozzle 1,0 80A (3D)	5
	T-10275	11.842.621.411	R2011	Nozzle 1,1 90A (3D)	10
	T-10276	11.842.621.412	R2012	Nozzle 1,2 100A (3D)	10
	T-10277	11.842.621.414	R2014	Nozzle 1,4 130A (3D)	10
16.	T-8623	11.835.221.153	Z101	Swirl Ring 0,4 (3xcw)	1
17.	T-8886	11.835.221.154	Z102	Swirl Ring 0,4 (2xcw)	1
18.	T-9287	11.834.321.153K	Z111	Swirl Ring – ceramic	1
	T-8618	11.834.321.153	Z111	Swirl Ring – vespel	1
19.	T-8655	11.835.421.303	Z111A	Spacer	2
20.	T-4920	11.843.021.320-AG	S002Y	Cathode, SilverEX-®	5
21.	T-11204*	11.843.021.320-PRO	S002Y	Cathode, Silver PRO	5
22.	T-4924	11.843.121.310-AG	S012X	Cathode, SilverEX-®	5
23.	T-11853*	11.843.121.310-PRO	S012X	Cathode, Silver PRO	5
24.	T-9924	11.842.411.510	S042	Cathode, HiFinox™ (i)	5
25.	T-9925	11.842.511.510	S052	Cathode, FineFocus® (i)	5
26.	T-4931	11.842.621.310-AG	R002	Cathode O_2 XL, SilverEX-®	5
27.	T-11851	11.842.621.310-PRO	R002	Cathode O_2 XL, Silver PRO	5
28.	T-11839	11.842.721.310-AG	R012	Cathode O_2, SilverEX-®	5
29.	T-10207	11.842.401.152	S901	Cooling Tube	1
30.	T-11161	11.842.601.152	R901	Cooling Tube	1
31.	T-11322	12.40320		Wrench for Swirl Ring	1
32.	Torches, cable leads. See following pages for details.				
33.	Coolant Liquid. Details on the page 144, section Accessories.				

(i) THIS PART MAY NOT BE DISTRIBUTED ON THE GERMAN MARKET. THERMACUT ACCEPTS NO RESPONSIBILITY IN CASE OF INDIRECT SALES TO GERMANY.

* FULLY INTERCHANGEABLE AND COMPATIBLE WITH ORIGINAL PARTS, BUT DIFFERS FROM ORIGINAL DESIGN

-PRO TECHNOLOGY OF SILVER INSERTED COPPER ELECTRODE BODY, WHICH SIGNIFICANTLY DECREASES ELECTRODE COSTS WITH SIMILAR WORK PERFORMANCE COMPARED TO FULL SILVER ELECTRODES.

Last update of this page: 07/09/2017. See Revision history for details.

THERMACUT®, FHT-EX® AND EX-TRAFIRE® ARE REGISTERED TRADEMARKS OF THERMACUT, K.S. AND MAY BE REGISTERED IN CZECH REPUBLIC AND/OR OTHER COUNTRIES. ALL OTHER TRADEMARKS ARE PROPERTIES OF THEIR RESPECTIVE OWNERS. THERMACUT IS NO WAY AFFILIATED WITH KJELLBERG®.
MOST THERMACUT PARTS ARE MADE FOR OR BY AN IBG COMPANY. PARTS INDICATED WITH A OEM ARE ORIGINAL PARTS MANUFACTURED BY THE ABOVE NAMED MANUFACTURER AND ARE BEING RESOLD BY THERMACUT. THERMACUT RESERVES THE RIGHT TO SUBSTITUTE OEM PARTS IN PLACE OF THERMACUT PARTS.
VALID FROM FEBRUARY 2018 • PREVIOUS VERSION IS NO LONGER VALID. • © COPYRIGHT 2018 BY THERMACUT® CZECH REPUBLIC. ALL RIGHTS RESERVED.

REPLACEMENT PARTS SUITABLE FOR
KJELLBERG®

HiFocus® 160i
PerCut® 160 / PerCut® 170 Torches and Cable leads

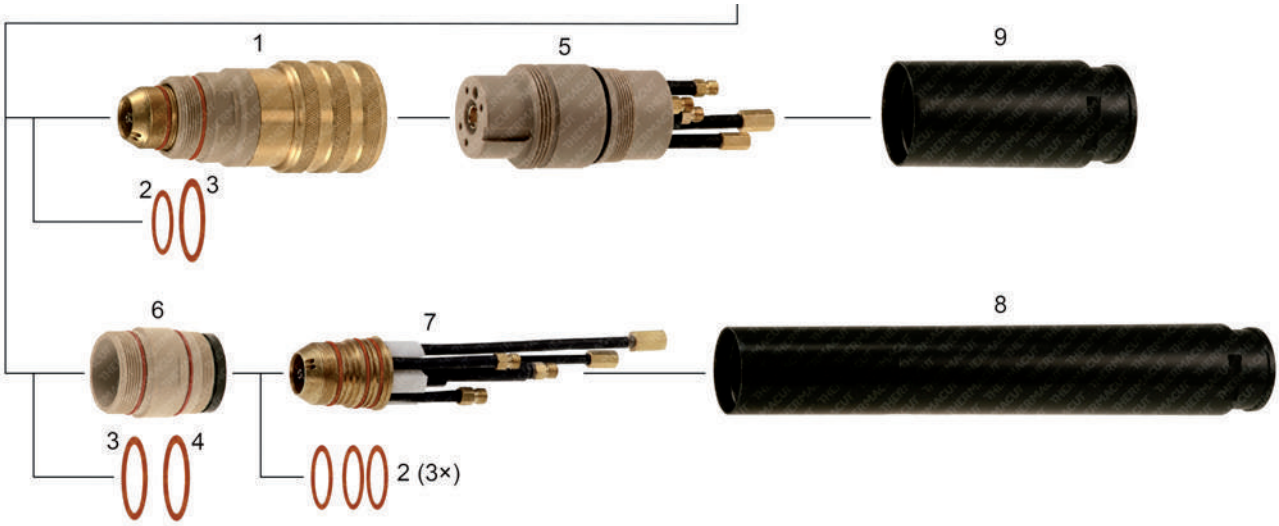

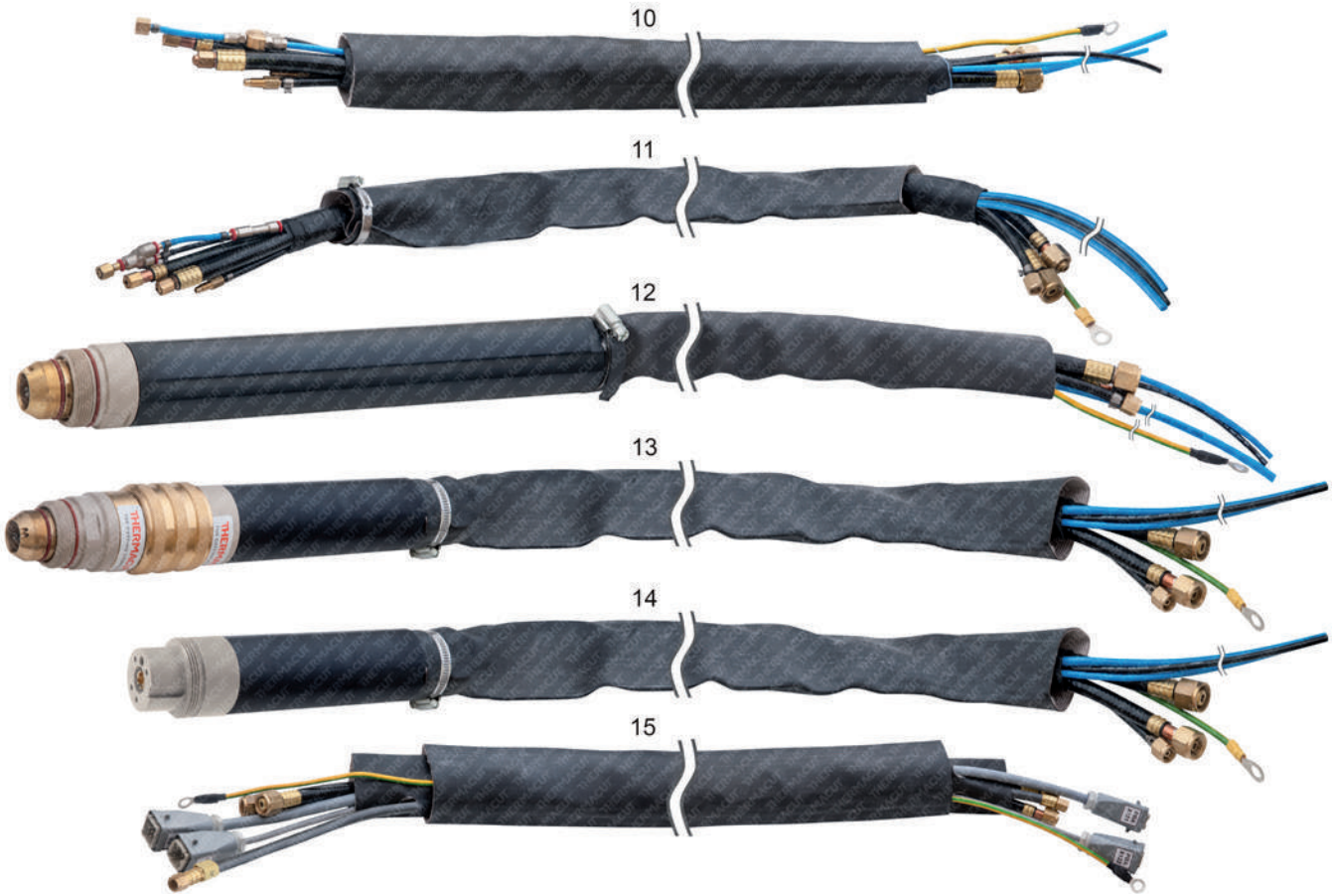

Last update of this page: 28/09/2015. See Revision history for details.

THERMACUT®, FHT-EX® AND EX-TRAFIRE® ARE REGISTERED TRADEMARKS OF THERMACUT, K.S. AND MAY BE REGISTERED IN CZECH REPUBLIC AND/OR OTHER COUNTRIES. ALL OTHER TRADEMARKS ARE PROPERTIES OF THEIR RESPECTIVE OWNERS. THERMACUT IS NO WAY AFFILIATED WITH KJELLBERG®.
MOST THERMACUT PARTS ARE MADE FOR OR BY AN IBG COMPANY. PARTS INDICATED WITH A OEM ARE ORIGINAL PARTS MANUFACTURED BY THE ABOVE NAMED MANUFACTURER AND ARE BEING RESOLD BY THERMACUT. THERMACUT RESERVES THE RIGHT TO SUBSTITUTE OEM PARTS IN PLACE OF THERMACUT PARTS.
VALID FROM FEBRUARY 2018 • PREVIOUS VERSION IS NO LONGER VALID. • © COPYRIGHT 2018 BY THERMACUT® CZECH REPUBLIC. ALL RIGHTS RESERVED.

REPLACEMENT PARTS SUITABLE FOR
KJELLBERG®

HiFocus® 160i
PerCut® 160 / PerCut® 170 Torches and Cable leads

Item	Part No.	Ref. No.	Description	Std. Pkg.	Item	Part No.	Ref. No.	Description	Std. Pkg.
#1.	T-10174#	11.843.021.100-UR	PerCut® 170 Front Part	1	NS	KT-1271	K.PERCUT160.1,5M	PerCut® 160-2 Mach. Torch with Leads 1,5m	1
2.	N-12300	10.505.916	O-Ring	1	10.	KT-1179	11.842.421.700A	PerCut® 160-2 Cable Leads 1,75m	1
3.	N-12301	10.505.946	O-Ring	1	11.	KT-1220	K.PERCUT170-2.1,75M.K	PerCut® 170-2 Cable Leads 1,75m	1
4.	N-18132	N-18132	O-Ring	1	12.	KT-1051	11.842.421.1015	PerCut® 160-2 Mach. Torch with Leads 1,75m	1
#5.	T-10175#	11.822.583-UR	PerCut® 170 Adaptor	1	13.	KT-1064	11.843.021.1015-UR	PerCut® 170-2-UR Mach. Torch w/ Leads 1,75m	1
6.	T-10282	11.842.221.100-10	Tube PerCut® 160	1		KT-1065	K.PERCUT170.3M	PerCut® 170-2-UR Mach. Torch with Leads 3m	1
7.	T-9933	11.842.221.100	Torch PerCut® 160	1		KT-1218	K.PERCUT170-2.6M	PerCut® 170-2-UR Mach. Torch with Leads 6m	1
8.	T-9857	11.842.421.250	Tube PerCut® 160	1	14.	KT-1265	K.PERCUT170-2.A	PerCut® 170 Adaptor with Leads 1,75m	1
9.	T-10176	11.843.021.250	Tube PerCut® 170	1	15.	KT-1381	11.825.710.1	PBL-H160 Lead Set, 10m	1
NS	T-9755	11.835.201.077	Clamping Bush	1		KT-1308	11.825.715.1	PBL-H160 Lead Set, 15m	1
NS	T-9756	11.835.201.076	Outer Bush	1		Different types of cable leads available on request			

THERMACUT TORCH & ADAPTOR HAVE TO BE USED AS A SET, CONECTORS ARE NOT COMPATIBLE WITH OEM CONECTORS.
W/ WITH

Last update of this page: 28/09/2015. See Revision history for details.

THERMACUT®, FHT-EX® AND EX-TRAFIRE® ARE REGISTERED TRADEMARKS OF THERMACUT, K.S. AND MAY BE REGISTERED IN CZECH REPUBLIC AND/OR OTHER COUNTRIES. ALL OTHER TRADEMARKS ARE PROPERTIES OF THEIR RESPECTIVE OWNERS. THERMACUT IS NO WAY AFFILIATED WITH KJELLBERG®.
MOST THERMACUT PARTS ARE MADE FOR OR BY AN IBG COMPANY. PARTS INDICATED WITH A OEM ARE ORIGINAL PARTS MANUFACTURED BY THE ABOVE NAMED MANUFACTURER AND ARE BEING RESOLD BY THERMACUT. THERMACUT RESERVES THE RIGHT TO SUBSTITUTE OEM PARTS IN PLACE OF THERMACUT PARTS.
VALID FROM FEBRUARY 2018 • PREVIOUS VERSION IS NO LONGER VALID. • © COPYRIGHT 2018 BY THERMACUT® CZECH REPUBLIC. ALL RIGHTS RESERVED.

REPLACEMENT PARTS SUITABLE FOR
KJELLBERG®

HiFocus® 160i, HiFocus® 161i, HiFocus® 280i, HiFocus® 360i, HiFocus® 440i
PerCut® 200 / 201 / 210 / 211 / 450M / 451M mild steel

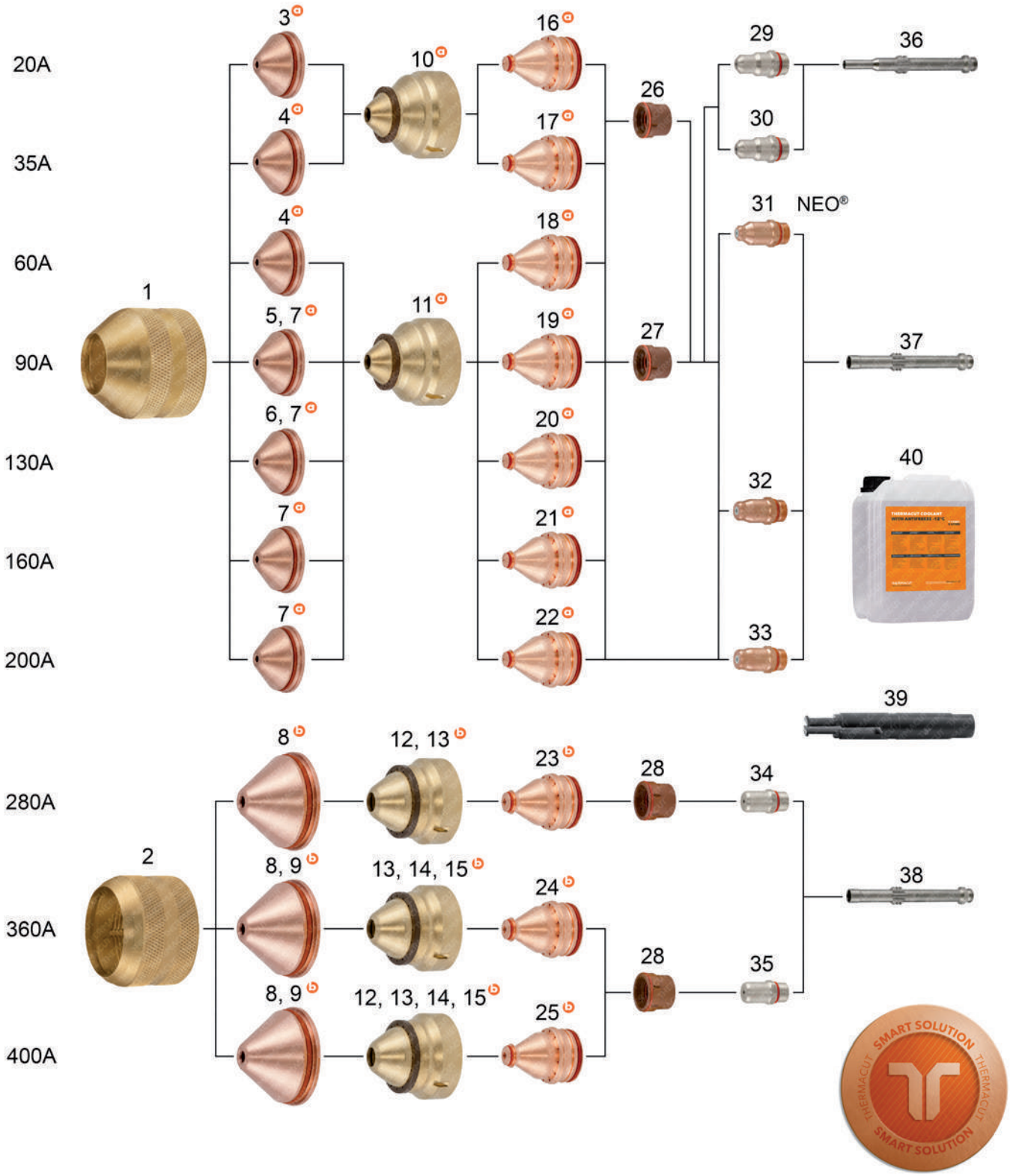

Last update of this page: 02/02/2018. See Revision history for details.

THERMACUT®, FHT-EX® AND EX-TRAFIRE® ARE REGISTERED TRADEMARKS OF THERMACUT, K.S. AND MAY BE REGISTERED IN CZECH REPUBLIC AND/OR OTHER COUNTRIES. ALL OTHER TRADEMARKS ARE PROPERTIES OF THEIR RESPECTIVE OWNERS. THERMACUT IS NO WAY AFFILIATED WITH KJELLBERG®.
MOST THERMACUT PARTS ARE MADE FOR OR BY AN IBG COMPANY. PARTS INDICATED WITH A OEM ARE ORIGINAL PARTS MANUFACTURED BY THE ABOVE NAMED MANUFACTURER AND ARE BEING RESOLD BY THERMACUT. THERMACUT RESERVES THE RIGHT TO SUBSTITUTE OEM PARTS IN PLACE OF THERMACUT PARTS.
VALID FROM FEBRUARY 2018 • PREVIOUS VERSION IS NO LONGER VALID. • © COPYRIGHT 2018 BY THERMACUT® CZECH REPUBLIC. ALL RIGHTS RESERVED.

REPLACEMENT PARTS SUITABLE FOR
KJELLBERG®

HiFocus® 160i, HiFocus® 161i, HiFocus® 280i, HiFocus® 360i, HiFocus® 440i
PerCut® 200 / 201 / 210 / 211 / 450M / 451M mild steel

PRODUCT BROCHURE WITH DETAILS AT
WWW.THERMACUT.COM

Item	Part No.	Ref. No.	Sh.Ref.No.	Description	Std. Pkg.
1.	T-11221	11.848.201.081	G501	Protection Cap 20–200A	1
	T-12010	11.852.201.081	G502	P. Cap 20–200A, PerCut® 451M	1
2.	T-11227	11.848.401.081	G521	Protection Cap 280–400A	1
	T-12011	11.852.401.081	G522	P. Cap 280–440A, PerCut® 451M	1
a 3.	T-11368	11.848.201.1515-UR	G4015	Swirl Gas Cap 20A	10
a 4.	T-11369	11.848.201.1520-UR	G4020	Swirl Gas Cap 35/60A	10
a 5.	T-11371	11.848.201.1525-UR	G4025	Swirl Gas Cap 90A	10
a 6.	T-11370	11.848.201.1522-UR	G4022	Swirl Gas Cap 130A	10
a 7.	T-11372	11.848.201.1530-UR	G4030	Swirl Gas Cap 90–200A	10
a	T-11968	11.848.201.1535-UR	G4035	Swirl Gas Cap 200A	10
a	T-11969	11.848.201.1540-UR	G4040	Swirl Gas Cap 200A	10
b 8.	T-11373	11.848.401.1550-UR	G4350	Swirl Gas Cap 280–400A	1
b 9.	T-11374	11.848.401.1555-UR	G4355	Swirl Gas Cap 360–400A	1
a 10.	T-11362	11.848.201.1604-UR	G3004	Retaining Cap 20–35A	1
a 11.	T-11363	11.848.201.1628-UR	G3028	Retaining Cap 60–200A	1
b 12.	T-11367	11.848.401.1649-UR	G3249	Retaining Cap 280/400A	1
b 13.	T-11365	11.848.401.1619-UR	G3219	Retaining Cap 280–400A	1
b 14.	T-11366	11.848.401.1629-UR	G3229	Retaining Cap 360/400A	1
b 15.	T-11364	11.848.401.1609-UR	G3209	Retaining Cap 360/400A	1
a 16.	T-11352	11.848.221.406-UR	G2006Y	Nozzle 0,6mm 20A	1
a 17.	T-11353	11.848.221.407-UR	G2007Y	Nozzle 0,7mm 35A	1
a 18.	T-11354	11.848.221.408-UR	G2008Y	Nozzle 0,8mm 60A	1
a 19.	T-11355	11.848.221.410-UR	G2010Y	Nozzle 1,0mm 90A	1

Item	Part No.	Ref. No.	Sh.Ref.No.	Description	Std. Pkg.
a 20.	T-11356	11.848.221.412-UR	G2012Y	Nozzle 1,2mm 130A	1
a 21.	T-11357	11.848.221.414-UR	G2014Y	Nozzle 1,4mm 160A	1
a 22.	T-11358	11.848.221.416-UR	G2016Y	Nozzle 1,6mm 200A	1
a	T-11835	11.848.221.417-UR	G2017Y	Nozzle 1,7mm 200A	1
b 23.	T-11359	11.848.421.426-UR	G2326Y	Nozzle 2,6mm 280A	1
b 24.	T-11360	11.848.421.430-UR	G2330Y	Nozzle 3,0mm 360A	1
b 25.	T-11361	11.848.421.431-UR	G2331Y	Nozzle 3,1mm 400A	1
26.	T-11223	11.848.221.145	G101	Swirl Ring	1
27.	T-11224	11.848.221.146	G102	Swirl Ring	1
28.	T-11230	11.848.421.145	G121	Swirl Ring	1
	T-11231	11.848.421.149	G125	Swirl Ring	1
29.	T-11225*	11.848.221.300-AG	G002Y	Cathode, SilverEX-®	5
30.	T-11226*	11.848.221.310-AG	G003Y	Cathode, SilverEX-®	5
NEW 31.	T-11858	11.848.231.320-PRO	G011Y	Cathode, Silver PRO	5
NEW 32.	T-11859	11.848.231.350-PRO	G015Y	Cathode, Silver PRO	5
NEW 33.	T-11860	11.848.231.360-PRO	G016Y	Cathode, Silver PRO	5
34.	T-11232*	11.848.421.310-AG	G032Y	Cathode, SilverEX-®	5
35.	T-11233*	11.848.421.330-AG	G034Y	Cathode, SilverEX-®	5
36.	T-11222	11.848.201.142	G901Y	Cooling Tube 20–200A	1
NEW 37.	T-11847	11.852.201.142	G902Y	Cooling Tube	1
38.	T-11228	11.848.401.142	G931Y	Cooling Tube 280–400A	1
39.	T-11322	12.40320		Wrench for Swirl Ring	1

40. Coolant Liquid. Details on the page 144, section Accessories.

* FULLY INTERCHANGEABLE AND COMPATIBLE WITH ORIGINAL PARTS, BUT DIFFERS FROM ORIGINAL DESIGN

a,b MUST BE USED ONLY AS A SET OF SWIRL GAS CAP, RETAINING CAP AND NOZZLE, THIS COMPLETE SET IS INTERCHANGEABLE AND COMPATIBLE WITH ORIGINAL PARTS

THERMACUT DESIGN IS PROTECTED BY UTILITY PATENT

-PRO SILVER PRO TECHNOLOGY INCREASES ELECTRODE LIFETIME SIGNIFICANTLY COMPARED TO STANDARD COPPER ELECTRODES

SMART SOLUTION – DESIGN IMPROVEMENTS THAT BRINGS ADDED VALUE SUCH AS IMPROVED LIFETIME OF CONSUMABLES, EXCELLENT CUT QUALITY, SPEED OR BETTER COST EFFECTIVENESS OF YOUR SYSTEM

Last update of this page: 02/02/2018. See Revision history for details.

THERMACUT®
THE CUTTING COMPANY®

WWW.THERMACUT.CZ
TEL.: +420 556 423 418
SALES@THERMACUT.CZ

WWW.THERMACUT.DE
TEL.: +49 (0) 27 39 40 33 0
INFO@THERMACUT.DE

WWW.THERMACUT.COM
TEL.: 1-603-542-6715
CUSTOMERSERVICE@THERMACUT.COM

THERMACUT®, FHT-EX® AND EX-TRAFIRE® ARE REGISTERED TRADEMARKS OF THERMACUT, K.S. AND MAY BE REGISTERED IN CZECH REPUBLIC AND/OR OTHER COUNTRIES. ALL OTHER TRADEMARKS ARE PROPERTIES OF THEIR RESPECTIVE OWNERS. THERMACUT IS NO WAY AFFILIATED WITH KJELLBERG®.
MOST THERMACUT PARTS ARE MADE FOR OR BY AN IBG COMPANY. PARTS INDICATED WITH A OEM ARE ORIGINAL PARTS MANUFACTURED BY THE ABOVE NAMED MANUFACTURER AND ARE BEING RESOLD BY THERMACUT. THERMACUT RESERVES THE RIGHT TO SUBSTITUTE OEM PARTS IN PLACE OF THERMACUT PARTS.
VALID FROM FEBRUARY 2018 • PREVIOUS VERSION IS NO LONGER VALID. • © COPYRIGHT 2018 BY THERMACUT® CZECH REPUBLIC. ALL RIGHTS RESERVED.

REPLACEMENT PARTS SUITABLE FOR
KJELLBERG®

HiFocus® 160i, HiFocus® 161i, HiFocus® 280i, HiFocus® 360i, HiFocus® 440i
PerCut® 200 / 201 / 210 / 211 / 450M / 451M stainless steel

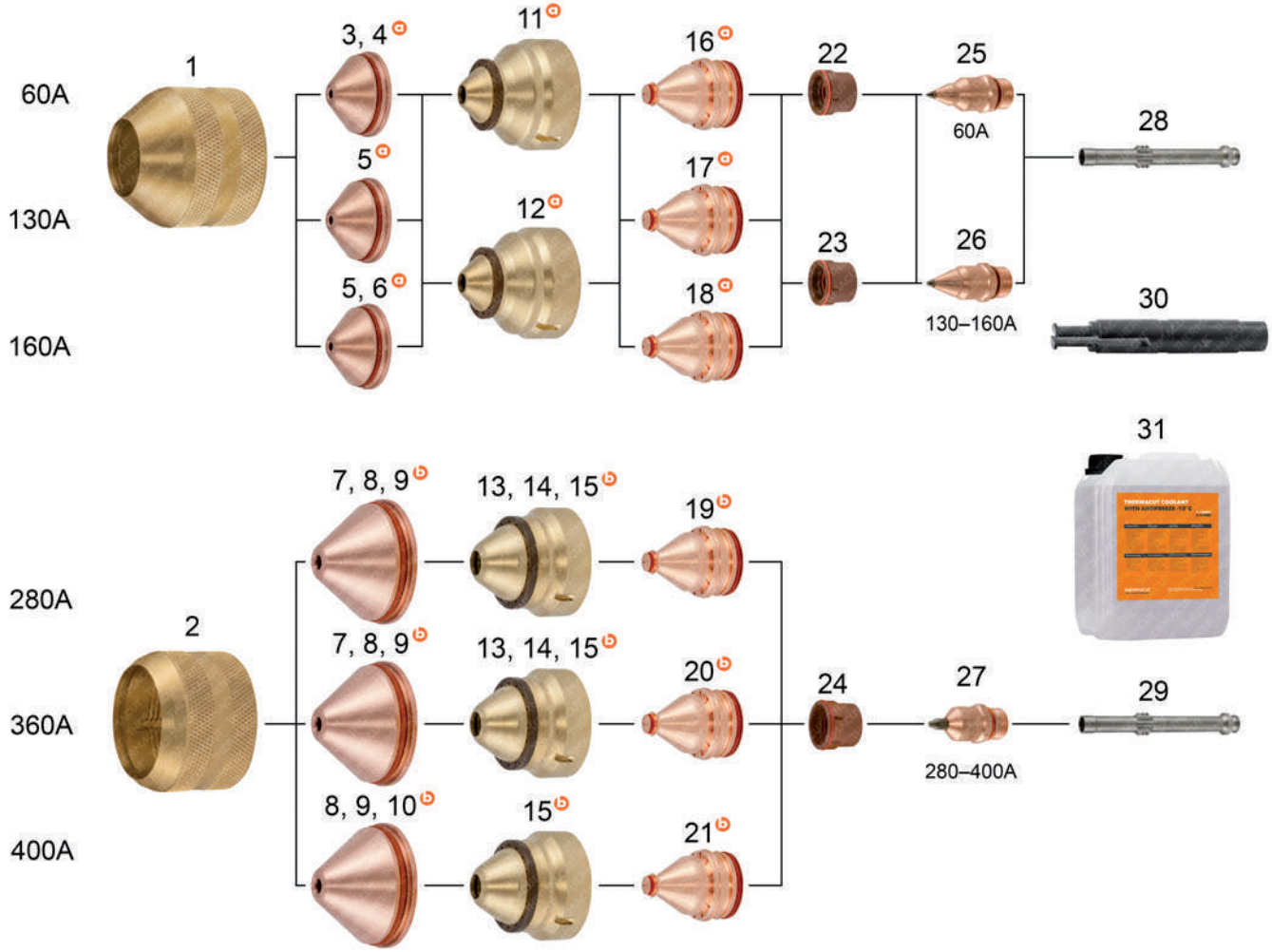

Last update of this page: 02/02/2018. See Revision history for details.

THERMACUT®, FHT-EX® AND EX-TRAFIRE® ARE REGISTERED TRADEMARKS OF THERMACUT, K.S. AND MAY BE REGISTERED IN CZECH REPUBLIC AND/OR OTHER COUNTRIES. ALL OTHER TRADEMARKS ARE PROPERTIES OF THEIR RESPECTIVE OWNERS. THERMACUT IS NO WAY AFFILIATED WITH KJELLBERG®.
MOST THERMACUT PARTS ARE MADE FOR OR BY AN IBG COMPANY. PARTS INDICATED WITH A OEM ARE ORIGINAL PARTS MANUFACTURED BY THE ABOVE NAMED MANUFACTURER AND ARE BEING RESOLD BY THERMACUT. THERMACUT RESERVES THE RIGHT TO SUBSTITUTE OEM PARTS IN PLACE OF THERMACUT PARTS.
VALID FROM FEBRUARY 2018 • PREVIOUS VERSION IS NO LONGER VALID. • © COPYRIGHT 2018 BY THERMACUT® CZECH REPUBLIC. ALL RIGHTS RESERVED.

REPLACEMENT PARTS SUITABLE FOR
KJELLBERG®

HiFocus® 160i, HiFocus® 161i, HiFocus® 280i, HiFocus® 360i, HiFocus® 440i
PerCut® 200 / 201 / 210 / 211 / 450M / 451M stainless steel

PRODUCT BROCHURE WITH DETAILS AT
WWW.THERMACUT.COM

Item	Part No.	Ref. No.	Sh.Ref.No.	Description	Std. Pkg.
1.	T-11221	11.848.201.081	G501	Protection Cap 60–160A	1
2.	T-11227	11.848.401.081	G521	Protection Cap 280–440A	1
a 3.	T-11370	11.848.201.1522-UR	G4022	Swirl Gas Cap 60A (1–5mm)	10
a 4.	T-11371	11.848.201.1525-UR	G4025	Swirl Gas Cap 60A (6mm)	10
a 5.	T-11372	11.848.201.1530-UR	G4030	Swirl Gas Cap 130/160A (5–20mm)	10
a 6.	T-11968	11.848.201.1535-UR	G4035	Swirl Gas Cap 160A (12–15mm)	10
b 7.	T-12001	11.848.401.1535-UR	G4335	Swirl Gas Cap 280/360A (15–30mm)	1
b 8.	T-12003	11.848.401.1540-UR	G4340	Swirl Gas Cap 280–440A (20–40mm)	1
b 9.	T-12002	11.848.401.1545-UR	G4345	Swirl Gas Cap 280–440A (40–80mm)	1
b 10.	T-11373	11.848.401.1550-UR	G4350	Swirl Gas Cap 440A (80–120mm)	1
a 11.	T-11997	11.848.201.1608-UR	G3008	Retaining Cap 60A (1–6mm)	1
a 12.	T-11996	11.848.201.1618-UR	G3018	Retaining Cap 130/160A (5–20mm)	1
b 13.	T-11366	11.848.401.1629-UR	G3229	Retaining Cap 280/360A (15–20mm)	1
b 14.	T-11365	11.848.401.1619-UR	G3219	Retaining Cap 280/360A (20–30mm)	1
b 15.	T-11364	11.848.401.1609-UR	G3209	Retaining Cap 280/440A (40–120mm)	1
a 16.	T-11355	11.848.221.410-UR	G2010Y	Nozzle 1,0mm 60A (i)	1
a 17.	T-12006	11.848.311.614-UR	G2514	Nozzle 1,4mm 130A (i)	1
a 18.	T-12007	11.848.311.615-UR	G2515	Nozzle 1,5mm 160A (i)	1
b 19.	T-11995	11.848.411.625-UR	G2725	Nozzle 2,5mm 280A (i)	1
b 20.	T-12009	11.848.411.627-UR	G2727	Nozzle 2,7mm 360A (i)	1
b 21.	T-12005	11.848.411.629-UR	G2729	Nozzle 2,9mm 440A (i)	1
22.	T-11223	11.848.221.145	G101	Swirl Ring 60A	1
23.	T-11998	11.848.221.149	G105	Swirl Ring 130/160A	1
24.	T-11231	11.848.421.149	G125	Swirl Ring 280–440A	1
25.	T-12000	11.848.211.510	G042	Cathode 60A (i)	5
26.	T-11999	11.848.311.510	G052	Cathode 130/160A (i)	5
27.	T-12004	11.848.411.500	G071	Cathode 280–440A (i)	5
28.	T-12008	11.848.211.142	G941	Cooling Tube 60–160A	1
29.	T-11229	11.848.411.142	G971	Cooling Tube 280–440A	1
30.	T-11322	12.40320		Wrench for Swirl Ring	1
31.	Coolant Liquid. Details on the page 144, section Accessories.				

* FULLY INTERCHANGEABLE AND COMPATIBLE WITH ORIGINAL PARTS, BUT DIFFERS FROM ORIGINAL DESIGN

(i) THIS PARTS MAY NOT BE DISTRIBUTED ON THE GERMAN MARKET. THERMACUT ACCEPTS NO RESPONSIBILITY IN CASE OF INDIRECT SALES TO GERMANY.

a,b MUST BE USED ONLY AS A SET OF SWIRL GAS CAP, RETAINING CAP AND NOZZLE, THIS COMPLETE SET IS INTERCHANGEABLE AND COMPATIBLE WITH ORIGINAL PARTS

THERMACUT DESIGN IS PROTECTED BY UTILITY PATENT

-PRO SILVER PRO TECHNOLOGY INCREASES ELECTRODE LIFETIME SIGNIFICANTLY COMPARED TO STANDARD COPPER ELECTRODES

SMART SOLUTION – DESIGN IMPROVEMENTS THAT BRINGS ADDED VALUE SUCH AS IMPROVED LIFETIME OF CONSUMABLES, EXCELLENT CUT QUALITY, SPEED OR BETTER COST EFFECTIVENESS OF YOUR SYSTEM

Last update of this page: 02/02/2018. See Revision history for details.

THERMACUT®, FHT-EX® AND EX-TRAFIRE® ARE REGISTERED TRADEMARKS OF THERMACUT, K.S. AND MAY BE REGISTERED IN CZECH REPUBLIC AND/OR OTHER COUNTRIES. ALL OTHER TRADEMARKS ARE PROPERTIES OF THEIR RESPECTIVE OWNERS. THERMACUT IS NO WAY AFFILIATED WITH KJELLBERG®.
MOST THERMACUT PARTS ARE MADE FOR OR BY AN IBG COMPANY. PARTS INDICATED WITH A OEM ARE ORIGINAL PARTS MANUFACTURED BY THE ABOVE NAMED MANUFACTURER AND ARE BEING RESOLD BY THERMACUT. THERMACUT RESERVES THE RIGHT TO SUBSTITUTE OEM PARTS IN PLACE OF THERMACUT PARTS.
VALID FROM FEBRUARY 2018 • PREVIOUS VERSION IS NO LONGER VALID. • © COPYRIGHT 2018 BY THERMACUT® CZECH REPUBLIC. ALL RIGHTS RESERVED.

PerCut® 370.1

1. HiFocus® – MS, Al

2. HiFocus® PLUS – MS

3. HiFocus® F – MS

4. HiFinox® – CrNi

5. HiFocus® F – CrNi, Al

6. HiFocus® F PLUS – CrNi

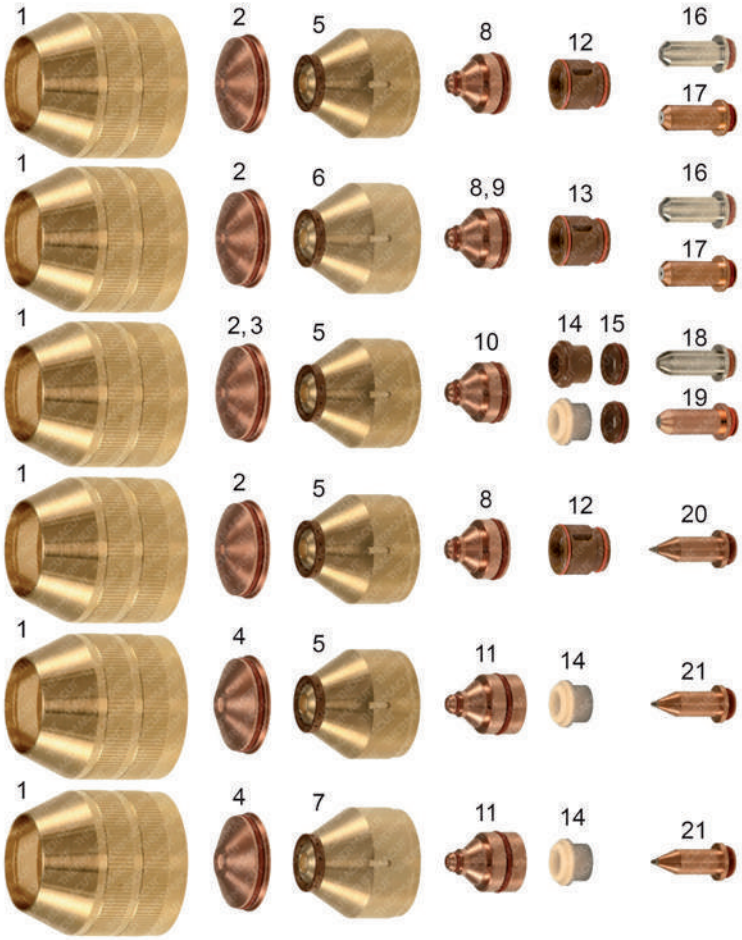

PerCut® 370.2

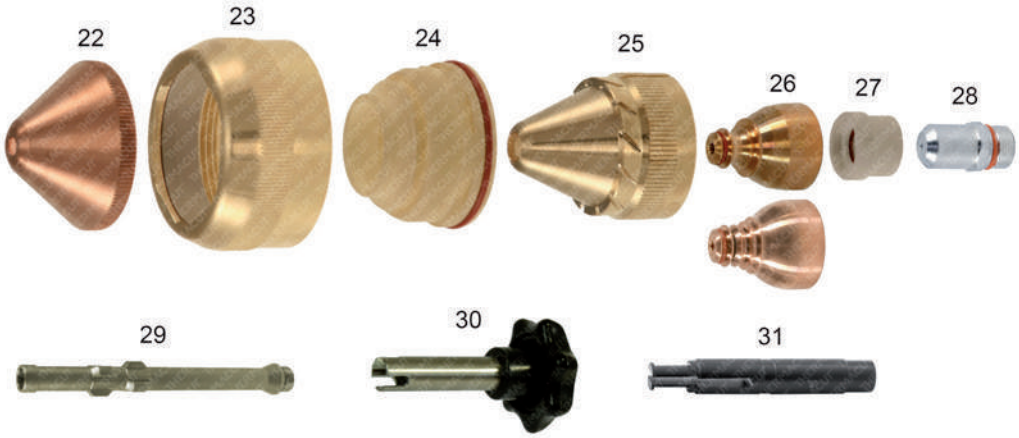

Last update of this page: 07/09/2017. See Revision history for details.

THERMACUT®, FHT-EX® AND EX-TRAFIRE® ARE REGISTERED TRADEMARKS OF THERMACUT, K.S. AND MAY BE REGISTERED IN CZECH REPUBLIC AND/OR OTHER COUNTRIES. ALL OTHER TRADEMARKS ARE PROPERTIES OF THEIR RESPECTIVE OWNERS. THERMACUT IS NO WAY AFFILIATED WITH KJELLBERG®.
MOST THERMACUT PARTS ARE MADE FOR OR BY AN IBG COMPANY. PARTS INDICATED WITH A OEM ARE ORIGINAL PARTS MANUFACTURED BY THE ABOVE NAMED MANUFACTURER AND ARE BEING RESOLD BY THERMACUT. THERMACUT RESERVES THE RIGHT TO SUBSTITUTE OEM PARTS IN PLACE OF THERMACUT PARTS.
VALID FROM FEBRUARY 2018 • PREVIOUS VERSION IS NO LONGER VALID. • © COPYRIGHT 2018 BY THERMACUT® CZECH REPUBLIC. ALL RIGHTS RESERVED.

REPLACEMENT PARTS SUITABLE FOR
KJELLBERG®

HiFocus® 280 / HiFocus® 360, HiFocus® 440
PerCut® 370.1, PerCut® 370.2

PerCut® 370.1

Item	Part No.	Ref. No.	Sh.Ref.No.	Description	Std. Pkg.
1.	T-8630	11.835.201.081	Z501	Protection Cap	1
2.	T-8631	11.835.201.1561	Z4015	Swirl Gas Cap 1,5	10
	T-8632	11.835.201.1571	Z4020	Swirl Gas Cap 2,0	10
	T-8885	11.835.201.1551	Z4022	Swirl Gas Cap 2,2	10
	T-8633	11.835.201.1581	Z4025	Swirl Gas Cap 2,5	10
	T-8634	11.835.201.1591	Z4030	Swirl Gas Cap 3,0	10
3.	T-8650	11.835.401.1571	Z4140	Swirl Gas Cap 4,0	10
4.	T-9928	11.835.411.1581	Z4530	Swirl Gas Cap 3,0	10
	T-10153	11.835.411.1580	Z4535	Swirl Gas Cap 3,5	1
	T-9929	11.835.411.1591	Z4540	Swirl Gas Cap 4,0	10
5.	T-8887	11.842.401.160	S3004	Nozzle Cap 0,4	1
	T-8888	11.842.401.162	S3008	Nozzle Cap 0,8	1
6.	T-8889	11.842.401.1622	S3028	Nozzle Cap 0,8	1
	T-10208	11.842.401.1624	S3048	Nozzle Cap 0,8	1
7.	T-10328	11.842.401.1621	S3018	Nozzle Cap 0,8	1
8.	T-10000	11.843.021.406	S2006X	Nozzle 0,6 25A	10
	T-10001	11.843.021.407	S2007X	Nozzle 0,7 35A	10
9.	T-10002	11.843.021.408	S2008X	Nozzle 0,8 50/60A	10
	T-10003	11.843.021.409	S2009X	Nozzle 0,9 70/80A	10
	T-10004	11.843.021.410	S2010X	Nozzle 1,0 80/90A	10
	T-9699	11.843.021.411	S2011X	Nozzle 1,1 90/100A	10
	T-10005	11.843.021.412	S2012X	Nozzle 1,2 100/130A	10

Item	Part No.	Ref. No.	Sh.Ref.No.	Description	Std. Pkg.
	T-10006	11.843.021.414	S2014X	Nozzle 1,4 130/160A	10
	T-10007	11.843.021.416	S2016X	Nozzle 1,6 160A	10
10.	T-10008	11.843.121.412	S2112X	Nozzle 1,2 100A	10
	T-10009	11.843.121.414	S2114X	Nozzle 1,4 130A	10
	T-10010	11.843.121.416	S2116X	Nozzle 1,6 160A	10
11.	T-10011	11.843.111.614	S2514X	Nozzle 1,4 120A	5
	T-9926	11.843.111.616	S2516X	Nozzle 1,6 140A	5
	T-9927	11.843.111.618	S2518X	Nozzle 1,8 160A	5
12.	T-8623	11.835.221.153	Z101	Swirl Ring 0,4 (3xcw)	1
13.	T-8886	11.835.221.154	Z102	Swirl Ring 0,4 (2xcw)	1
14.	T-9287	11.834.321.153K	Z111	Swirl Ring – ceramic	1
	T-8618	11.834.321.153	Z111	Swirl Ring – vespel	1
	T-10380	11.834.321.153 OEM	Z111	Swirl Ring	1
15.	T-8655	11.835.421.303	Z111A	Spacer	2
16.	T-4920	11.843.021.320-AG	S002Y	Cathode SilverEX-®	5
17.	T-11204**	11.843.021.320-PRO	S002Y	Cathode, Silver PRO	5
18.	T-4924	11.843.121.310-AG	S012X	Cathode SilverEX-®	5
19.	T-11853**	11.843.121.310-PRO	S012X	Cathode, Silver PRO	5
20.	T-9924	11.842.411.510	S042	Cathode, HiFinox™ (i)	5
21.	T-9925	11.842.511.510	S052	Cathode, FineFocus® (i)	5
31.	T-11322	12.40320		Wrench for Swirl Ring	1

PerCut® 370.2

Item	Part No.	Ref. No.	Sh.Ref.No.	Description	Std. Pkg.
22.	T-10591	11.833.101.1550	V4330	Swirl Gas Cap 3,0	1
	T-10220	11.833.101.155	V4335	Swirl Gas Cap 3,5	1
	T-10221	11.833.101.156	V4340	Swirl Gas Cap 4,0	1
	T-10222	11.833.101.157	V4345	Swirl Gas Cap 4,5	1
	T-10223	11.833.101.158	V4350	Swirl Gas Cap 5,0	1
	T-10224	11.833.101.159	V4360	Swirl Gas Cap 6,0	1
NS	T-11810	11.833.111.159	V4560	Swirl Gas Cap 6,0	1
23.	T-10470	11.841.721.081	T502	Protection Cap PerCut® 370.2	1
24.	N-18267	11.836.921.271	T522	Insulator PerCut® 370.2	1
24a.	N-18371	N-18371		O-Ring	1
25.	T-10214	11.836.901.163	T3030	Nozzle Cap (12x1,5 30° cw)	1
	T-10215	11.836.901.164	T3045	Nozzle Cap (12x1,5 45° cw)	1
	T-10217	11.836.901.1641	T3145	Nozzle Cap (12x1,5 45° ccw)	1
	T-10216	11.836.901.165	T3060	Nozzle Cap (12x1,5 60° cw)	1
	T-10218	11.836.901.1651	T3160	Nozzle Cap (12x1,5 60° ccw)	1
26.	T-10559	11.846.921.415	T2115Y	Nozzle O_2 120A, repl.11.836.921.415 (i)	10
	T-10560	11.846.921.420	T2120Y	Nozzle O_2 200A, repl.11.836.921.420 (i)	10
	T-10561	11.846.921.425	T2125Y	Nozzle O_2 250A,,repl.11.836.921.425 (i)	10

Item	Part No.	Ref. No.	Sh.Ref.No.	Description	Std. Pkg.
	T-10562	11.846.921.427	T2127Y	Nozzle O_2 300A, repl.11.836.921.427 (i)	10
	T-10563	11.846.921.430	T2130Y	Nozzle O_2 360A, repl.11.836.921.430 (i)	10
	T-10927**	11.846.921.415-UR	T2115Y	Nozzle O_2 120A, repl.11.836.921.415	5
	T-10928**	11.846.921.420-UR	T2120Y	Nozzle O_2 200A, repl.11.836.921.420	10
	T-10929**	11.846.921.425-UR	T2125Y	Nozzle O_2 250A, repl.11.836.921.425	10
	T-10930**	11.846.921.427-UR	T2127Y	Nozzle O_2 300A, repl.11.836.921.427	10
	T-10931**	11.846.921.430-UR	T2130Y	Nozzle O_2 360A, repl.11.836.921.430	5
27.	T-10466	11.836.921.1542	T104	Swirl Ring (3x0,4 cw)	1
	T-10366	11.836.921.153 OEM	T101	Swirl Ring (6x0,8 cw)	1
	T-10672	11.836.921.153	T101	Swirl Ring (6x0,8 cw)	1
	T-10367	11.836.921.1531 OEM	T111	Swirl Ring (6x0,8 ccw)	1
	T-10464	11.836.921.154	T102	Swirl Ring (3x0,8 cw)	5
	T-10465	11.836.921.1541	T112	Swirl Ring (3x0,8 ccw)	5
	TN-0004	11.836.921.153	T101	Swirl Ring (6x0,8 cw)	1
28.	T-10804	11.844.921.300-AG	T012Y	SilverEX-® Cathode, use with T902Y	5
29.	T-10558	11.844.901.152	T902Y	Cooling Tube, use with T012Y	1
30.	T-10564	12.38180		Wrench For Cooling Tube	1
31.	T-11322	12.40320		Wrench for Swirl Ring	1

(i) THIS PART MAY NOT BE DISTRIBUTED ON THE GERMAN MARKET. THERMACUT ACCEPTS NO RESPONSIBILITY IN CASE OF INDIRECT SALES TO GERMANY.

** A UNIQUE DESIGN WHICH ENHANCES PERFORMANCE AND DIFFERS FROM OEM DESIGNS

CCW COUNTER CLOCK WISE GAS SWIRLING, USE OF CCW PARTS WILL MAKE CUT ANGLE ON THE OPPOSITE SIDE, THAN WITH STANDARD CLOCK WISE (CW) SWIRLING PARTS.

-PRO TECHNOLOGY OF SILVER INSERTED COPPER ELECTRODE BODY, WHICH SIGNIFICANTLY DECREASES ELECTRODE COSTS WITH SIMILAR WORK PERFORMANCE COMPARED TO FULL SILVER ELECTRODES.

Last update of this page: 07/09/2017. See Revision history for details.

THERMACUT®
THE CUTTING COMPANY

WWW.THERMACUT.CZ
TEL.: +420 556 423 418
SALES@THERMACUT.CZ

WWW.THERMACUT.DE
TEL.: +49 (0) 27 39 40 33 0
INFO@THERMACUT.DE

WWW.THERMACUT.COM
TEL.: 1-603-542-6715
CUSTOMERSERVICE@THERMACUT.COM

THERMACUT®, FHT-EX® AND EX-TRAFIRE® ARE REGISTERED TRADEMARKS OF THERMACUT, K.S. AND MAY BE REGISTERED IN CZECH REPUBLIC AND/OR OTHER COUNTRIES. ALL OTHER TRADEMARKS ARE PROPERTIES OF THEIR RESPECTIVE OWNERS. THERMACUT IS NO WAY AFFILIATED WITH KJELLBERG®.
MOST THERMACUT PARTS ARE MADE FOR OR BY AN IBG COMPANY. PARTS INDICATED WITH A OEM ARE ORIGINAL PARTS MANUFACTURED BY THE ABOVE NAMED MANUFACTURER AND ARE BEING RESOLD BY THERMACUT. THERMACUT RESERVES THE RIGHT TO SUBSTITUTE OEM PARTS IN PLACE OF THERMACUT PARTS.
VALID FROM FEBRUARY 2018 • PREVIOUS VERSION IS NO LONGER VALID. • © COPYRIGHT 2018 BY THERMACUT® CZECH REPUBLIC. ALL RIGHTS RESERVED.

REPLACEMENT PARTS SUITABLE FOR
KJELLBERG®

FineFocus® 800 / FineFocus® 900
PA-S75™/PB-S75™/PB-S76™/PB-S77™

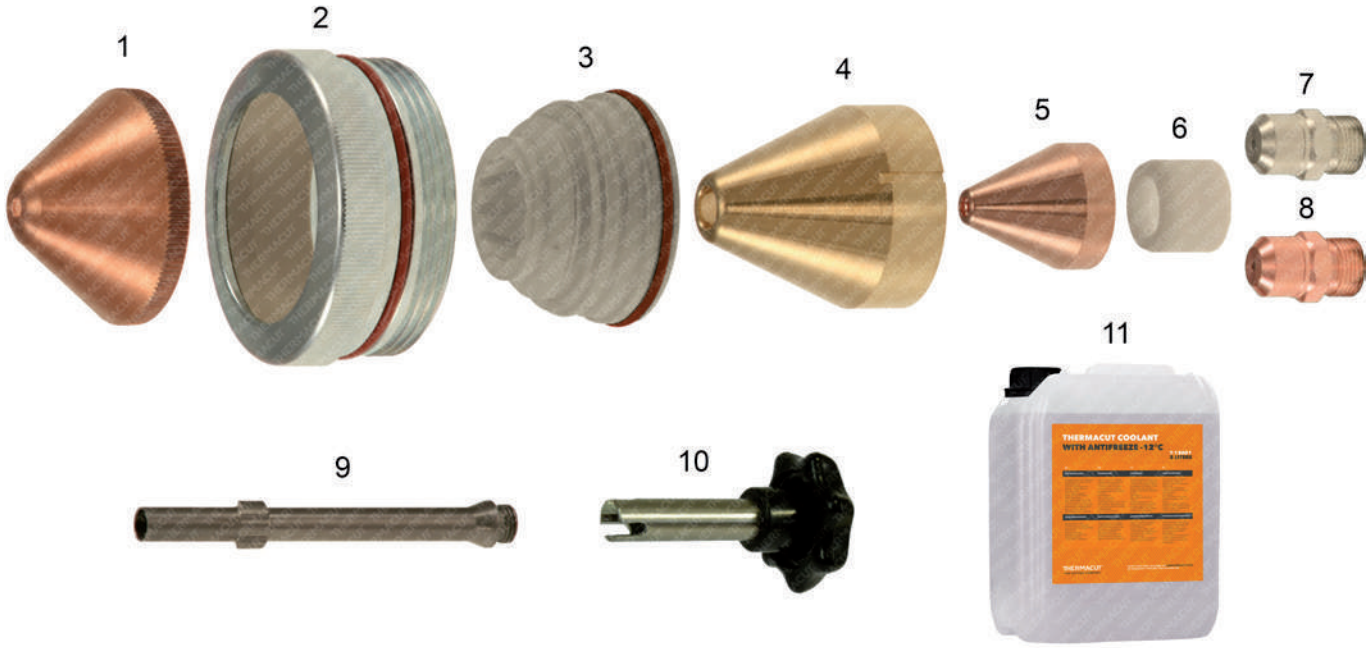

Item	Part No.	Ref. No.	Sh.Ref.No.	Description	Std. Pkg.	Item	Part No.	Ref. No.	Sh.Ref.No.	Description	Std. Pkg.
1.	T-10591	11.833.101.1550	V4330	Swirl Gas Cap 3,0	1	5.	T-8927	11.828.901.420	L1 XL	Nozzle Air/O_2 160A	10
	T-10220	11.833.101.155	V4335	Swirl Gas Cap 3,5	1		T-11301	11.828.901.425	L2 XL	Nozzle Air/O_2 250	10
	T-10221	11.833.101.156	V4340	Swirl Gas Cap 4,0	1		T-10247	11.828.901.427	L4XL	Nozzle Air/O_2 300A	5
	T-10222	11.833.101.157	V4345	Swirl Gas Cap 4,5	1		T-10588	12.40850	L2	Nozzle 250A PB-S75™ WH	5
	T-10223	11.833.101.158	V4350	Swirl Gas Cap 5,0	1		T-11569	12.43050 OEM	L1	Nozzle 160A PB-S75™ WH	1
	T-10224	11.833.101.159	V4360	Swirl Gas Cap 6,0	1	6.	T-10369	12.40860		Swirl Ring Air/O_2 PB-S75™	5
2.	T-10357	11.833.101.261 OEM	V501	Protection Cap PB-S76™/PB-S77™	1	7.	T-4932	11.828.921.300-AG	K2-XL	Cathode SilverEX.® O_2/Air PB-S76™; PB-S75™	5
NS	T-10361	11.828.401.265 OEM		Protection Cap PB-S76™/PB-S77™	1		T-4933	11.833.121.300-AG	K3-XL	Cathode SilverEX.® O_2/Air PB-S77™	5
3.	N-18266	11.836.901.271	T521	Insulator	1	8.	T-10225	12.40870	K2	Cathode Air/O_2 PB-S75™ WH	10
3a.	N-18371	N-18371		O-Ring	1	9.	T-10371	12.51440 OEM		Cooling Tube PB-S75™	1
NS	T-10364	11.828.401.275 OEM		PTFE Cover PB-S76™/PB-S77™	1	10.	T-10564	12.38180		Wrench For Cooling Tube	1
4.	T-10219	12.37790		Nozzle Cap PB-S75™	1	11.	Coolant Liquid. Details on the page 144, section Accessories.				

Last update of this page: 18/05/2017. See Revision history for details.

THERMACUT®, FHT-EX® AND EX-TRAFIRE® ARE REGISTERED TRADEMARKS OF THERMACUT, K.S. AND MAY BE REGISTERED IN CZECH REPUBLIC AND/OR OTHER COUNTRIES. ALL OTHER TRADEMARKS ARE PROPERTIES OF THEIR RESPECTIVE OWNERS. THERMACUT IS NO WAY AFFILIATED WITH KJELLBERG®.
MOST THERMACUT PARTS ARE MADE FOR OR BY AN IBG COMPANY. PARTS INDICATED WITH A OEM ARE ORIGINAL PARTS MANUFACTURED BY THE ABOVE NAMED MANUFACTURER AND ARE BEING RESOLD BY THERMACUT. THERMACUT RESERVES THE RIGHT TO SUBSTITUTE OEM PARTS IN PLACE OF THERMACUT PARTS.
VALID FROM FEBRUARY 2018 • PREVIOUS VERSION IS NO LONGER VALID. • © COPYRIGHT 2018 BY THERMACUT® CZECH REPUBLIC. ALL RIGHTS RESERVED.

REPLACEMENT PARTS SUITABLE FOR
KJELLBERG®

FineFocus® 800 / FineFocus® 900
PB-S80™

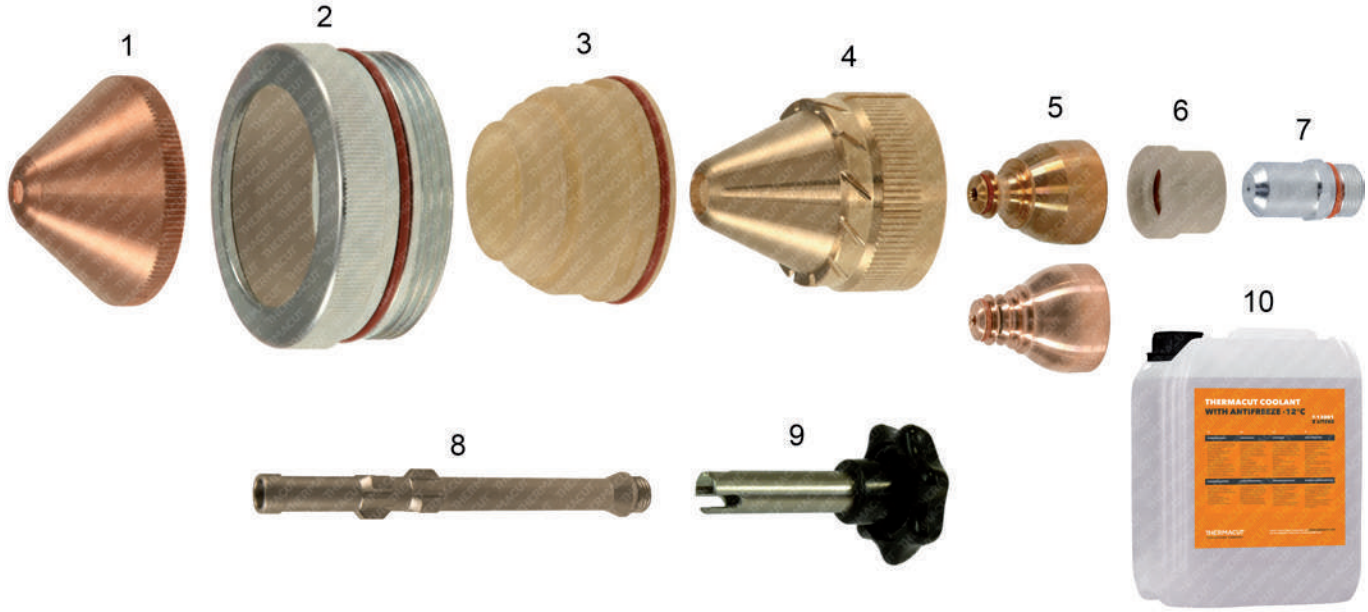

Item	Part No.	Ref. No.	Sh.Ref.No.	Description	Std. Pkg.
1.	T-10591	11.833.101.1550	V4330	Swirl Gas Cap 3,0	1
	T-10220	11.833.101.155	V4335	Swirl Gas Cap 3,5	1
	T-10221	11.833.101.156	V4340	Swirl Gas Cap 4,0	1
	T-10222	11.833.101.157	V4345	Swirl Gas Cap 4,5	1
	T-10223	11.833.101.158	V4350	Swirl Gas Cap 5,0	1
	T-10224	11.833.101.159	V4360	Swirl Gas Cap 6,0	1
2.	T-10997	11.833.121.271 OEM	V522	Protection Cap	1
	T-10998	11.833.121.261 OEM	V502	Protection Cap	1
	T-10357	11.833.101.261 OEM	V501	Protection Cap	1
3.	N-18267	11.836.921.271		Insulator	1
	N-18266	11.836.901.271	T521	Insulator	1
3a.	N-18371	N-18371		O-Ring	1
4.	T-10214	11.836.901.163	T3030	Nozzle Cap (12x1,5 30°cw)	1
	T-10215	11.836.901.164	T3045	Nozzle Cap (12x1,5 45°cw)	1
	T-10217	11.836.901.1641	T3145	Nozzle Cap (12x1,5 45°ccw)	1
	T-10216	11.836.901.165	T3060	Nozzle Cap (12x1,5 60°cw)	1
	T-10218	11.836.901.1651	T3160	Nozzle Cap (12x1,5 60° ccw)	1
5.	T-10559	11.846.921.415	T2115Y	Nozzle O_2 120A, repl.11.836.921.415 (i)	10
	T-10560	11.846.921.420	T2120Y	Nozzle O_2 200A, repl.11.836.921.420 (i)	10
5.	T-10561	11.846.921.425	T2125Y	Nozzle O_2 250A, repl.11.836.921.425 (i)	10

Item	Part No.	Ref. No.	Sh.Ref.No.	Description	Std. Pkg.
	T-10562	11.846.921.427	T2127Y	Nozzle O_2 300A, repl.11.836.921.427 (i)	10
	T-10563	11.846.921.430	T2130Y	Nozzle O_2 360A, repl.11.836.921.430 (i)	10
	T-10927**	11.846.921.415-UR	T2115Y	Nozzle O_2 120A, repl.11.836.921.415	5
	T-10928**	11.846.921.420-UR	T2120Y	Nozzle O_2 200A, repl.11.836.921.420	10
	T-10929**	11.846.921.425-UR	T2125Y	Nozzle O_2 250A, repl.11.836.921.425	10
	T-10930**	11.846.921.427-UR	T2127Y	Nozzle O_2 300A, repl.11.836.921.427	10
	T-10931**	11.846.921.430-UR	T2130Y	Nozzle O_2 360A, repl.11.836.921.430	5
6.	T-10466	11.836.921.1542	T104	Swirl Ring (3x0,4 cw)	1
	T-10366	11.836.921.153 OEM	T101	Swirl Ring (6x0,8 cw)	1
	T-10672	11.836.921.153	T101	Swirl Ring (6x0,8 cw)	1
	T-10367	11.836.921.1531 OEM	T111	Swirl Ring (6x0,8 ccw)	1
	T-10464	11.836.921.154	T102	Swirl Ring (3x0,8 cw)	5
	T-10465	11.836.921.1541	T112	Swirl Ring (3x0,8 ccw)	5
	TN-0004	11.836.921.153	T101	Swirl Ring (6x0,8 cw), ceramic	1
7.	T-10804	11.844.921.300-AG	T012Y	SilverEX® Cathode, use with T902Y	5
8.	T-10467	11.828.911.230	V951	Cooling tube PB-S77™; PB-S80™	1
	T-10558	11.844.901.152	T902Y	Cooling Tube, use with T012Y	1
9.	T-10564	12.38180		Wrench For Cooling Tube	1
10.	Coolant Liquid. Details on the page 144, section Accessories.				

(i) THIS PART MAY NOT BE DISTRIBUTED ON THE GERMAN, ITALIAN, FRENCH AND GREAT BRITAIN MARKET. THERMACUT ACCEPTS NO RESPONSIBILITY IN CASE OF INDIRECT SALES TO GERMANY, ITALY, FRANCE AND GREAT BRITAIN.

** A UNIQUE DESIGN WHICH ENHANCES PERFORMANCE AND DIFFERS FROM OEM DESIGNS

CCW COUNTER CLOCK WISE GAS SWIRLING, USE OF CCW PARTS WILL MAKE CUT ANGLE ON THE OPPOSITE SIDE, THAN WITH STANDARD CLOCK WISE (CW) SWIRLING PARTS.

Last update of this page: 22/06/2016. See Revision history for details.

THERMACUT®, FHT-EX® AND EX-TRAFIRE® ARE REGISTERED TRADEMARKS OF THERMACUT, K.S. AND MAY BE REGISTERED IN CZECH REPUBLIC AND/OR OTHER COUNTRIES. ALL OTHER TRADEMARKS ARE PROPERTIES OF THEIR RESPECTIVE OWNERS. THERMACUT IS NO WAY AFFILIATED WITH KJELLBERG®.
MOST THERMACUT PARTS ARE MADE FOR OR BY AN IBG COMPANY. PARTS INDICATED WITH A OEM ARE ORIGINAL PARTS MANUFACTURED BY THE ABOVE NAMED MANUFACTURER AND ARE BEING RESOLD BY THERMACUT. THERMACUT RESERVES THE RIGHT TO SUBSTITUTE OEM PARTS IN PLACE OF THERMACUT PARTS.
VALID FROM FEBRUARY 2018 • PREVIOUS VERSION IS NO LONGER VALID. • © COPYRIGHT 2018 BY THERMACUT® CZECH REPUBLIC. ALL RIGHTS RESERVED.

REPLACEMENT PARTS SUITABLE FOR
KOMATSU®

G990™, G9120™ TORCH, 90A
RASOR® KCR-1251, 12714, 9714, 0951

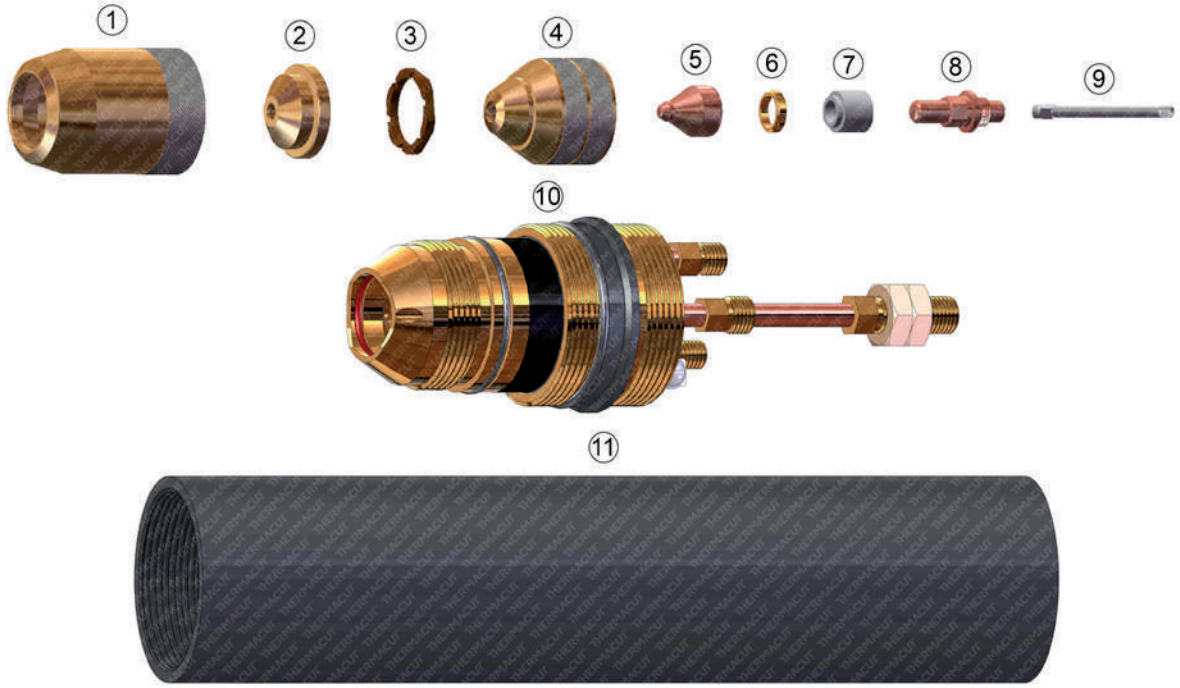

Item	Part No.	Ref. No.	Description	Std. Pkg	Item	Part No.	Ref. No.	Description	Std. Pkg.
1.	T-2057	65-0434-016	Cap #2	1	7.	T-2061	65-0434-020	Guide	1
2.	T-4097	65-0442-005	Shield Cap	1	8.	T-2321	65-0442-001	Electrode	5
3.	T-2359	65-0442-004	Spacer Ring	1	9.	T-3421	65-0442-009	Cooling Tube, 120A	1
4.	T-2056	65-0434-015	Cap #1	1	10.	T-8818	7848-65-5620	Torch Body	1
5.	T-2054	65-0434-007	Nozzle, 1.1mm	5	11.	T-11198	969-94-61310	Tube	1
	T-2353	65-0442-002	Nozzle, 1.3mm	5	NS	KT-1414	K.G990.10M.K	G990™ Cable Leads 10m (33')	1
6.	T-9595	65-0434-018	Swirl Ring	2					

NS NOT SHOWN IN THE PICTURE

Last update of this page: 07/09/2017. See Revision history for details.

THERMACUT®, FHT-EX® AND EX-TRAFIRE® ARE REGISTERED TRADEMARKS OF THERMACUT, K.S. AND MAY BE REGISTERED IN CZECH REPUBLIC AND/OR OTHER COUNTRIES. ALL OTHER TRADEMARKS ARE PROPERTIES OF THEIR RESPECTIVE OWNERS. THERMACUT IS NO WAY AFFILIATED WITH KOMATSU®.
MOST THERMACUT PARTS ARE MADE FOR OR BY AN IBG COMPANY. PARTS INDICATED WITH A OEM ARE ORIGINAL PARTS MANUFACTURED BY THE ABOVE NAMED MANUFACTURER AND ARE BEING RESOLD BY THERMACUT. THERMACUT RESERVES THE RIGHT TO SUBSTITUTE OEM PARTS IN PLACE OF THERMACUT PARTS.
VALID FROM FEBRUARY 2018 • PREVIOUS VERSION IS NO LONGER VALID. • © COPYRIGHT 2018 BY THERMACUT® CZECH REPUBLIC. ALL RIGHTS RESERVED.

REPLACEMENT PARTS SUITABLE FOR
MIGATRONIC®

PLA-45™, PLA-85™

Item	Part No.	Ref. No.	Description	Torch	Item	Part No.	Ref. No.	Description	Torch
1.	T-4800	80600088	Distance Spring	PLA-45,85	8.	T-4816	80650005	Torch Body-Hand	PLA-45,85
2.	T-4805	80600095	Distance Ring	PLA-45,85	NS	T-4802	80600092	Handle	PLA-45,85
3.	T-4825	80640123	Shield Cap	PLA-45	NS	T-4806	80600096	Tiping Device	PLA-45,85
4.	T-4813	80630011	Shield Cap	PLA-85	NS	T-7000	45050101	Trigger	PLA-45,85
5.	T-4815	80630012A	Tip 1.0mm	PLA-45	NS	T-4807	80600097	Contact Pin	PLA-45,85
6.	T-4814	80630012	Tip 1.0mm	PLA-45,85	NS	T-7002	82034014	Gas Flow Meter	PLA-45,85
	T-4811	80630009	Tip 1.2mm	PLA-85	NS	T-4808	80600099	Mounted Print	PLA-45,85
	T-4812	80630010	Tip 1.4mm	PLA-85	NS	T-4803	80600093	Cutting Guide	PLA-45,85
7.	T-4810	80610005	Electrode	PLA-45,85	NS	KT-1303	80690085	PLA-45/85™ Torch with Leads 6m (20'), centr.conn.	PLA-45,85

NS NOT SHOWN IN THE PICTURE

Last update of this page: 04/02/2015. See Revision history for details.

THERMACUT®, FHT-EX® AND EX-TRAFIRE® ARE REGISTERED TRADEMARKS OF THERMACUT, K.S. AND MAY BE REGISTERED IN CZECH REPUBLIC AND/OR OTHER COUNTRIES. ALL OTHER TRADEMARKS ARE PROPERTIES OF THEIR RESPECTIVE OWNERS. THERMACUT IS NO WAY AFFILIATED WITH MIGATRONIC®.
MOST THERMACUT PARTS ARE MADE FOR OR BY AN IBG COMPANY. PARTS INDICATED WITH A OEM ARE ORIGINAL PARTS MANUFACTURED BY THE ABOVE NAMED MANUFACTURER AND ARE BEING RESOLD BY THERMACUT. THERMACUT RESERVES THE RIGHT TO SUBSTITUTE OEM PARTS IN PLACE OF THERMACUT PARTS.
VALID FROM FEBRUARY 2018 • PREVIOUS VERSION IS NO LONGER VALID. • © COPYRIGHT 2018 BY THERMACUT® CZECH REPUBLIC. ALL RIGHTS RESERVED.

REPLACEMENT PARTS SUITABLE FOR
SAF®

OCP 150

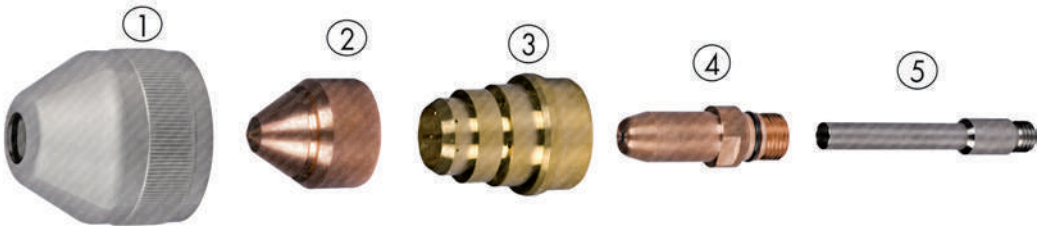

Item	Part No.	Ref. No.	Description	Std. Pkg.	Item	Part No.	Ref. No.	Description	Std. Pkg.
1.	T-10456	0409-2166	Nozzle Retaining Cap	1	NS	T-10135	0409-2250	Nozzle 120A, Ar/H_2	1
NS	T-10186	0409-2210	Nozzle Retaining Cap	1	3.	T-10458	0409-2170	Swirl Ring 60A	1
2.	T-10449	0409-2171	Nozzle 15A	5		T-10457	0409-2169	Swirl Ring 120A	1
	T-10450	0409-2173	Nozzle 30A	5	NS	T-10139	0409-2209	Swirl Ring	1
	T-10451	0409-2174	Nozzle 40A	5	4.	T-10459	0409-2184-UR	Electrode	5
	T-10452	0409-2176	Nozzle 60A	5		T-10460	0409-2184	Electrode (replace 0409-2185)	5
	T-10453	0409-2183	Nozzle 90A	5		T-10461	0409-2185	Electrode	5
	T-10454	0409-2186	Nozzle 120A	5	NS	T-10137	0409-2194T	Electrode	5
NS	T-10140	0409-2231	Nozzle 15A, N_2	1	5.	T-10455	0409-2154	Cooling Tube	1
NS	T-10141	0409-2233	Nozzle 30A, N_2	1	NS	T-10019	0408-1238	O-Ring	1
NS	T-10142	0409-2234	Nozzle 40A, N_2	1	NS	T-10020	0408-1282	O-Ring	1
NS	T-10143	0409-2236	Nozzle 60A, N_2	1	NS	T-10021	0408-1284	O-Ring	1
NS	T-10134	0409-2239	Nozzle 90A, N_2	1	NS	T-10022	0408-1283	O-Ring	1
NS	T-10172	0409-2240	Nozzle 120A, N_2	1	NS	T-10049	0409-2168	O-Ring	1

Last update of this page: 24/02/2017. See Revision history for details.

WWW.THERMACUT.CZ
TEL.: +420 556 423 418
SALES@THERMACUT.CZ

WWW.THERMACUT.DE
TEL.: +49 (0) 27 39 40 33 0
INFO@THERMACUT.DE

WWW.THERMACUT.COM
TEL.: 1-603-542-6715
CUSTOMERSERVICE@THERMACUT.COM

THERMACUT®, FHT-EX® AND EX-TRAFIRE® ARE REGISTERED TRADEMARKS OF THERMACUT, K.S. AND MAY BE REGISTERED IN CZECH REPUBLIC AND/OR OTHER COUNTRIES. ALL OTHER TRADEMARKS ARE PROPERTIES OF THEIR RESPECTIVE OWNERS. THERMACUT IS NO WAY AFFILIATED WITH SAF®.
MOST THERMACUT PARTS ARE MADE FOR OR BY AN IBG COMPANY. PARTS INDICATED WITH A OEM ARE ORIGINAL PARTS MANUFACTURED BY THE ABOVE NAMED MANUFACTURER AND ARE BEING RESOLD BY THERMACUT. THERMACUT RESERVES THE RIGHT TO SUBSTITUTE OEM PARTS IN PLACE OF THERMACUT PARTS.
VALID FROM FEBRUARY 2018 • PREVIOUS VERSION IS NO LONGER VALID. • © COPYRIGHT 2018 BY THERMACUT® CZECH REPUBLIC. ALL RIGHTS RESERVED.

REPLACEMENT PARTS SUITABLE FOR
SAF®

CP40R, CP100R

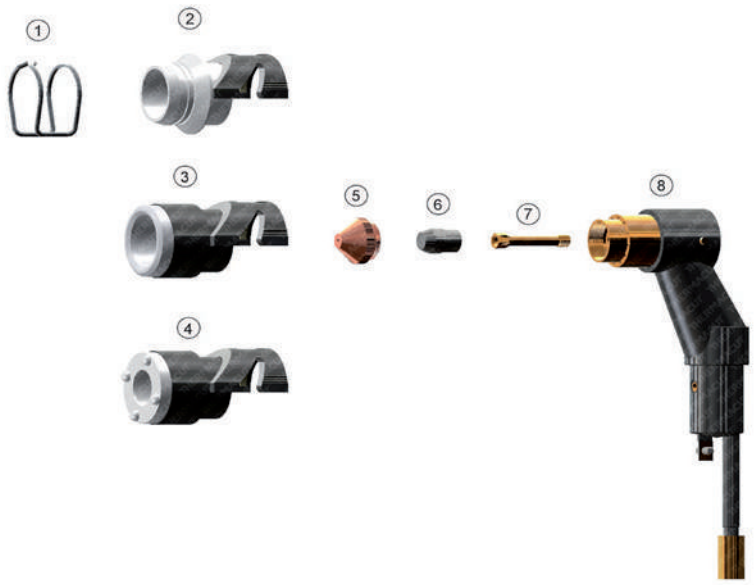

Item	Part No.	Ref. No.	Description	Std. Pkg.	Item	Part No.	Ref. No.	Description	Std. Pkg.
1.	T-0431	0408-2053	Guide Wire (=W000302609)	5	6.	T-3565	0408-2534	Electrode Hf (=0408-2404, 095482)	5
2.	T-0430	0408-2270	Shroud (=0408-2267, W000302606)	1		T-3549	0408-2051	Electrode, Zr (=W000302545)	10
3.	T-8307	0408-2268	Shroud (=W000302552)	1	7.	T-8067	0408-2381	Plunger Tube (=W000302554)	1
4.	T-8306	0408-2405	Shroud (=W000302557)	1	8.	T-1829	0408-2056	Torch Body, Hand CP40R® (=W000142824)	1
5.	T-8069	0408-2400	Tip 1.0mm(=0408-2261)	5	NS	KT-1376	K.CP40R.CP100R.6M.K	CP40R®, CP100R® Cable Leads 6m (20')	1
NS	T-8070	0408-2401	Tip 1.2mm (=0408-2262)	5	NS	KT-1062	0408-2050	CP40R® Torch with Leads 6m (20')	1
NS	T-8071	0408-2396	Tip 1.6mm (=0408-2385)	5	NS	KT-1063	0408-2375	CP100R® Torch with Leads 6m (20')	1

CPM-200, CPM-250, CPM-300, CPM-720

Item	Part No.	Ref. No.	Description	Std. Pkg.	Item	Part No.	Ref. No.	Description	Std. Pkg.
	T-11045	0408-1482	Electrode 90–120A	1		T-8753	0409-1279	Nozzle 180A, O_2	5
	T-10022	0408-1283	O-Ring D8×1,25 Nitrile	1		T-8846	0409-1280	Nozzle 240A, O_2	5
	T-8755	0409-2095	Electrode H25 120–240A	5		TN-0026	0409-1350	Nozzle 320A, N_2	1
	T-8754	0409-2076	Nozzle 120A, O_2	5		T-8848	0409-1351	Nozzle 500A, N_2	1
	T-10136	0409-1278	Nozzle 150A, O_2	1					

NS NOT SHOWN IN THE PICTURE

Last update of this page: 17/11/2015. See Revision history for details.

THERMACUT®, FHT-EX® AND EX-TRAFIRE® ARE REGISTERED TRADEMARKS OF THERMACUT, K.S. AND MAY BE REGISTERED IN CZECH REPUBLIC AND/OR OTHER COUNTRIES. ALL OTHER TRADEMARKS ARE PROPERTIES OF THEIR RESPECTIVE OWNERS. THERMACUT IS NO WAY AFFILIATED WITH SAF®.
MOST THERMACUT PARTS ARE MADE FOR OR BY AN IBG COMPANY. PARTS INDICATED WITH A OEM ARE ORIGINAL PARTS MANUFACTURED BY THE ABOVE NAMED MANUFACTURER AND ARE BEING RESOLD BY THERMACUT. THERMACUT RESERVES THE RIGHT TO SUBSTITUTE OEM PARTS IN PLACE OF THERMACUT PARTS.
VALID FROM FEBRUARY 2018 • PREVIOUS VERSION IS NO LONGER VALID. • © COPYRIGHT 2018 BY THERMACUT® CZECH REPUBLIC. ALL RIGHTS RESERVED.

REPLACEMENT PARTS SUITABLE FOR
Thermal Dynamics®

PCH-10 TORCH

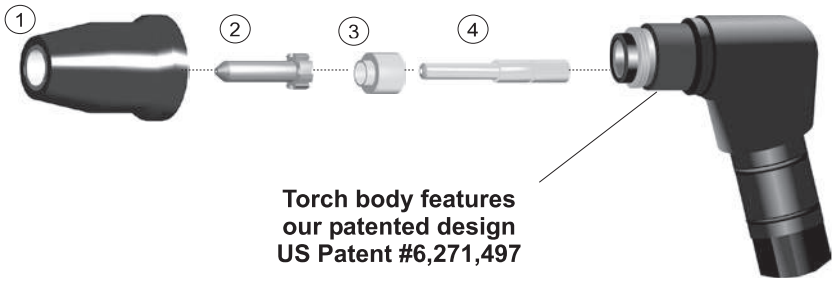

Item	Part No	Ref. No.	Description	Std. Pkg	Item	Part No.	Ref. No	Description	Std. Pkg.
1.	T-0272	9-6003	Shield Cup	1	4.	T-0103	9-6006	Electrode	10
2.	T-2307	9-6099	Tip, 12 Amp	10	5.	T-0267**	9-5807DURA	Hand DURA Torch 70°	1
3.	T-0269	9-6007	Gas Distributor	5		T-1075	9-5808	Hand Torch 90°	1

PCH-25/38 TORCH

Item	Part No	Ref. No.	Description	Std. Pkg	Item	Part No.	Ref. No	Description	Std. Pkg.
1.	T-0272	9-6003	Shield Cup	1		T-1332	9-6507	Gas Distributor, Long Life	5
NS	T-0273	9-6004	Shield Cup, Crown, *9-6003 Req	1	4.	T-0103	9-6006	Electrode, Air	10
2.	T-1334	9-4476	Tip, Cutting	10		T-1333	9-6506	Electrode, Air, Long Life	10
	T-1331	9-6501	Tip, Drag, Long Life	10	5.	T-0267**	9-5807 DURA	Hand Torch (70)	1
3.	T-0269	9-6007	Gas Distributor	5		T-1075	9-5808	Hand Torch (90)	1

PCH/M28, PCH-26

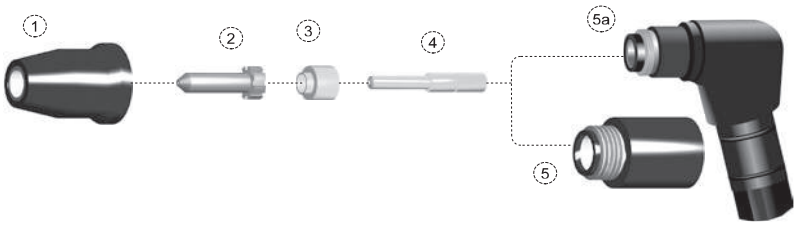

Torch body features
our patented design
US Patent #6,271,497

Item	Part No	Ref. No.	Description	Std. Pkg	Item	Part No.	Ref. No	Description	Std. Pkg.
1.	T-0272	9-6003	Shield Cup	1		T-1331	9-6501	Tip, Drag, LongLife	10
	T-0273	9-6004	Shield Cup, Crown,*9-6003 req'd	1	3.	T-0269	9-6007	Gas Distributor	5
	T-1328	9-6503	Shield Cup, Long Life	1		T-1332	9-6507	Gas Distributor, Long Life	5
2.	T-0270	9-6000	Tip	10	4.	T-0103	9-6006	Electrode	10
	T-0271	9-6001	Tip, Drag	10		T-1333	9-6506	Electrode, Long Life	10
	T-1074	9-6002	Tip, Gouging	10	5.	T-0268	9-5809	Machine Torch	1
	T-2182	9-6502	Tip, Gouging, Long Life	10	5a.	T-0267**	9-5807DURA	Hand DURA-Torch 70°	1
	T-1329	9-6120	Tip, HD	10		T-1075	9-5808	Hand Torch 90°	1
	T-1330	9-6500	Tip, Stand Off, LongLife	10					

NOTE: PCH/M-28 USES ONLY "LONGLIFE" CONSUMABLES.

** A UNIQUE DESIGN WHICH ENHANCES PERFORMANCE AND DIFFERS FROM OEM DESIGNS

Last update of this page: 07/09/2017. See Revision history for details.

WWW.THERMACUT.CZ
TEL.: +420 556 423 418
SALES@THERMACUT.CZ

WWW.THERMACUT.DE
TEL.: +49 (0) 27 39 40 33 0
INFO@THERMACUT.DE

WWW.THERMACUT.COM
TEL.: 1-603-542-6715
CUSTOMERSERVICE@THERMACUT.COM

THERMACUT®, FHT-EX® AND EX-TRAFIRE® ARE REGISTERED TRADEMARKS OF THERMACUT, K.S. AND MAY BE REGISTERED IN CZECH REPUBLIC AND/OR OTHER COUNTRIES. ALL OTHER TRADEMARKS ARE PROPERTIES OF THEIR RESPECTIVE OWNERS. THERMACUT IS NO WAY AFFILIATED WITH Thermal Dynamics®.
MOST THERMACUT PARTS ARE MADE FOR OR BY AN IBG COMPANY. PARTS INDICATED WITH A OEM ARE ORIGINAL PARTS MANUFACTURED BY THE ABOVE NAMED MANUFACTURER AND ARE BEING RESOLD BY THERMACUT. THERMACUT RESERVES THE RIGHT TO SUBSTITUTE OEM PARTS IN PLACE OF THERMACUT PARTS.
VALID FROM FEBRUARY 2018 • PREVIOUS VERSION IS NO LONGER VALID. • © COPYRIGHT 2018 BY THERMACUT® CZECH REPUBLIC. ALL RIGHTS RESERVED.

REPLACEMENT PARTS SUITABLE FOR
Thermal Dynamics®

PCH/M-35, PCH/M-40

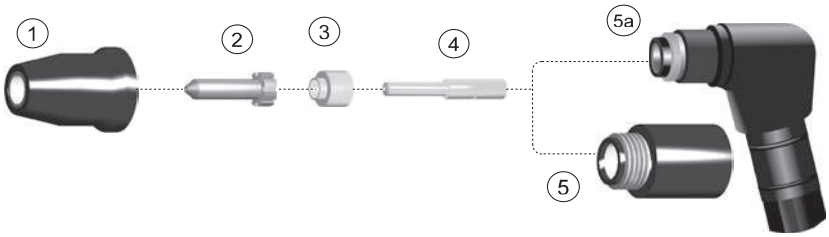

Torch body features our patented design US Patent #6,271,497

Item	Part No.	Ref. No.	Description	Std. Pkg	Item	Part No.	Ref. No.	Description	Std. Pkg.
1.	T-0272	9-6003	Shield Cup	1		T1331	9-6501	Tip, Drag, Long Life	10
	T-0273	9-6004	Shield Cup, Crown,*9-6003, Req'd	1	3.	T-0269	9-6007	Gas Distributor	5
	T-1328	9-6503	Shield Cup, Long Life	1		T-1332	9-6507	Gas Distributor, Long Life	5
2.	T-0270	9-6000	Tip	10	4.	T-0103	9-6006	Electrode	10
	T-1074	9-6001	Tip, Drag	10		T-1333	9-6506	Electrode, Long Life	10
	T-1329	9-6002	Tip, Gouging	10	5.	T-0268	9-5809	Machine Torch	1
	T-1330	9-6120	Tip, HD	10	5a.	T-1075	9-5808	Hand Torch 90°	1
	T-2182	9-6502	Tip Gouging, Long Life	10		T-0267**	9-5807DURA	Hand Dura Torch, 70°	1
	T-1331	9-6500	Tip, Stand Off, Long Life	10					

PCH-42

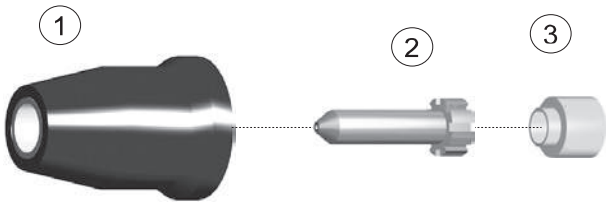

Item	Part No	Ref. No.	Description	Std. Pkg	Item	Part No.	Ref. No	Description	Std. Pkg.
1.	T-0272	9-6003	Shield Cup	1		T-1331	9-6501	Drag Tip	10
	T-0273	9-6004	Shield Cup, Crown *9-6003 Req'd	1		T-2182	9-6502	Tip, Gouging	10
	T-1328	9-6503	Shield Cup, Long Life	1	3.	T-1332	9-6507	Gas Distributor	5
2.	T-1330	9-6500	Standoff Tip	10					

** A UNIQUE DESIGN WHICH ENHANCES PERFORMANCE AND DIFFERS FROM OEM DESIGNS

Last update of this page: 07/09/2017. See Revision history for details.

THERMACUT® THE CUTTING COMPANY®

WWW.THERMACUT.CZ
TEL.: +420 556 423 418
SALES@THERMACUT.CZ

WWW.THERMACUT.DE
TEL.: +49 (0) 27 39 40 33 0
INFO@THERMACUT.DE

WWW.THERMACUT.COM
TEL.: 1-603-542-6715
CUSTOMERSERVICE@THERMACUT.COM

THERMACUT®, FHT-EX® AND EX-TRAFIRE® ARE REGISTERED TRADEMARKS OF THERMACUT, K.S. AND MAY BE REGISTERED IN CZECH REPUBLIC AND/OR OTHER COUNTRIES. ALL OTHER TRADEMARKS ARE PROPERTIES OF THEIR RESPECTIVE OWNERS. THERMACUT IS NO WAY AFFILIATED WITH Thermal Dynamics®.
MOST THERMACUT PARTS ARE MADE FOR OR BY AN IBG COMPANY. PARTS INDICATED WITH A OEM ARE ORIGINAL PARTS MANUFACTURED BY THE ABOVE NAMED MANUFACTURER AND ARE BEING RESOLD BY THERMACUT. THERMACUT RESERVES THE RIGHT TO SUBSTITUTE OEM PARTS IN PLACE OF THERMACUT PARTS.
VALID FROM FEBRUARY 2018 • PREVIOUS VERSION IS NO LONGER VALID. • © COPYRIGHT 2018 BY THERMACUT® CZECH REPUBLIC. ALL RIGHTS RESERVED.

PCH/M-51 TORCH

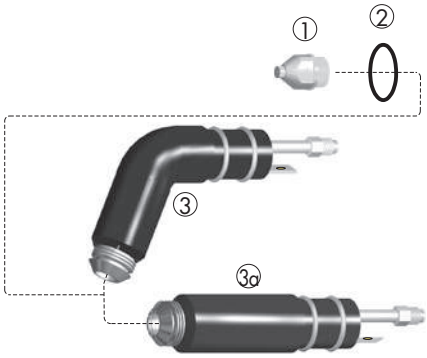

ACCESSORIES

Item	Part No	Ref. No.	Description	Std. Pkg	Item	Part No.	Ref. No	Description	Std. Pkg.
1.	T-0148	9-5631	Tip, .043	10	3.	T-0152	9-5635	TMT-51, Hand Torch	1
2.	T-0151	8-5525	O-Ring	10	3a.	T-0156	9-5634	TMT-51, Machine Torch	1

ACCESSORIES

Item	Part No	Ref. No.	Description	Std. Pkg	Item	Part No.	Ref. No	Description	Std. Pkg.
1.	T-1040	9-5636-1	Handle with Switch	1	3.	T-0161	8-4204	Bushing	1
2.	T-0159	8-5005	Mounting Tube	1					

PCH/M-52 TORCH

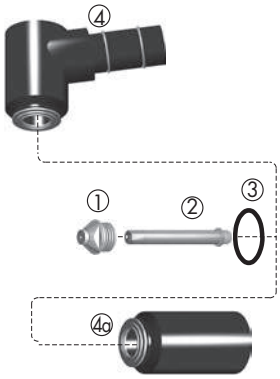

ACCESSORIES

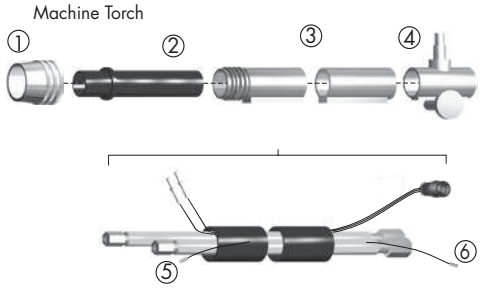

Item	Part No	Ref. No.	Description	Std. Pkg	Item	Part No.	Ref. No	Description	Std. Pkg.
1.	T-0170	9-5708	Tip, .059, 100 Amp	10	3.	T-0151	8-5525	O-Ring	10
	T-0172	9-5618	Tip, .043, 45 Amp	10	4.	T-0178	9-5642	TMT-52, Hand Torch	1
2.	T-0176	9-5619	Electrode, Air	10	4a.	T-0179	9-5643	TMT-52, Machine Torch	1

ACCESSORIES

Item	Part No	Ref. No.	Description	Std. Pkg	Item	Part No.	Ref. No	Description	Std. Pkg.
1.	T-0157	8-4018	Nut	1	5.	T-0914	8-4190	Fitting (-), Torch End	1
2.	T-0183	9-1901	Adapter	1		T-0976	8-5085	Ferrule	1
3.	T-0159	8-5005	Mounting Tube	1		T-0889	8-5013	Ferrule	1
4.	T-0160	7-2827 OEM	Pinion Assembly	1	6.	T-0924	8-7033	Fitting (-), Console End	1

Last update of this page: 02/02/2018. See Revision history for details.

THERMACUT®, FHT-EX® AND EX-TRAFIRE® ARE REGISTERED TRADEMARKS OF THERMACUT, K.S. AND MAY BE REGISTERED IN CZECH REPUBLIC AND/OR OTHER COUNTRIES. ALL OTHER TRADEMARKS ARE PROPERTIES OF THEIR RESPECTIVE OWNERS. THERMACUT IS NO WAY AFFILIATED WITH Thermal Dynamics®.
MOST THERMACUT PARTS ARE MADE FOR OR BY AN IBG COMPANY. PARTS INDICATED WITH A OEM ARE ORIGINAL PARTS MANUFACTURED BY THE ABOVE NAMED MANUFACTURER AND ARE BEING RESOLD BY THERMACUT. THERMACUT RESERVES THE RIGHT TO SUBSTITUTE OEM PARTS IN PLACE OF THERMACUT PARTS.
VALID FROM FEBRUARY 2018 • PREVIOUS VERSION IS NO LONGER VALID. • © COPYRIGHT 2018 BY THERMACUT® CZECH REPUBLIC. ALL RIGHTS RESERVED.

REPLACEMENT PARTS SUITABLE FOR
Thermal Dynamics®

PCH/M-6B

Item	Part No.	Ref. No.	Description	Std. Pkg.	Item	Part No.	Ref. No.	Description	Std. Pkg.
1.	T-0233	8-6515	End Cap	1	12.	T-0217	8-6577	6B Machine Torch	1
2.	T-0232	8-6514	Insulator, End Piece	5		T-1423	8-6583	6B Hand Torch 70°	1
3.	T-0231	8-6581	Outer Insulator	1		T-0216	8-6584	6B Hand Torch 90°	1
4.	T-0230	8-6512	Gasket, Outer Insulator	5	NS	T-0159	8-5005	Positioning tube	1
5.	T-0229	8-6572	Tip, .125, 400 A	5	NS	T-0236	8-6517 OEM	Liner/Tip Wrench	1
	T-0228	8-6582	Tip, .113, 300 A	5	NS	T-0161	8-4204	Bushing	1
	T-0227	8-6575	Tip, .093, 200 A	5	NS	KT-1337	2-2747	PCH-6B 70° Torch with Leads 15,2m (50'), PAK®45	1
	T-0226	8-6648	Tip, .076, 150 A	5	NS	KT-1431	2-2789	PCH-6B 70° Torch with Leads 15,2m (50'), PAK®44	1
	T-0225	8-6580	Tip, .067, 100 A	5	NS	KT-1215	2-2790	PCH-6B® 90° Torch with Leads 7,6m (25')	1
6.	T-0224	8-6586	Electrode, N_2, Metal Seat, L-Amp	10	NS	KT-1323	4-2725	PCH-6B® Cable Leads 7,6m (25')	1
7.	T-0223	8-6578	Electrode, N_2, Gen. Purpose	10	NS	KT-1324	2-2792	PCM-6B® 180° Torch with Leads 7,6m (25')	1
8.	T-0222	8-6571	Liner Assy	1	NS	KT-1188	4-2726	PCH-6B® Cable Leads 15,2m (50')	1
9.	T-0221	8-6587	Gas Distributor, 6B, 4 Holes, Rev. Swirl	1	NS	KT-1198	2-2749	PCM-6B® 180° Torch with Leads 15,2m (50')	1
	T-0220	8-6569	Gas Distributor, 6B, 4 Holes	1	NS	KT-1443	9-2866	Plasma Hose 7,6m (25')	1
10.	T-0219	8-6615	Electrode Holder	1	NS	KT-1444	9-2950	Power Hose 7,6m (25')	1
11.	T-0108	8-0531	O-Ring	1					

NS NOT SHOWN IN THE PICTURE

Last update of this page: 17/11/2015. See Revision history for details.

THERMACUT®, FHT-EX® AND EX-TRAFIRE® ARE REGISTERED TRADEMARKS OF THERMACUT, K.S. AND MAY BE REGISTERED IN CZECH REPUBLIC AND/OR OTHER COUNTRIES. ALL OTHER TRADEMARKS ARE PROPERTIES OF THEIR RESPECTIVE OWNERS. THERMACUT IS NO WAY AFFILIATED WITH Thermal Dynamics®.
MOST THERMACUT PARTS ARE MADE FOR OR BY AN IBG COMPANY. PARTS INDICATED WITH A OEM ARE ORIGINAL PARTS MANUFACTURED BY THE ABOVE NAMED MANUFACTURER AND ARE BEING RESOLD BY THERMACUT. THERMACUT RESERVES THE RIGHT TO SUBSTITUTE OEM PARTS IN PLACE OF THERMACUT PARTS.
VALID FROM FEBRUARY 2018 • PREVIOUS VERSION IS NO LONGER VALID. • © COPYRIGHT 2018 BY THERMACUT® CZECH REPUBLIC. ALL RIGHTS RESERVED.

PCH/M-150 TORCH

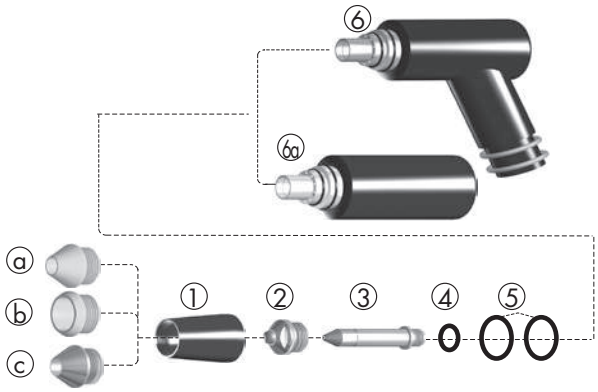

ACCESSORIES

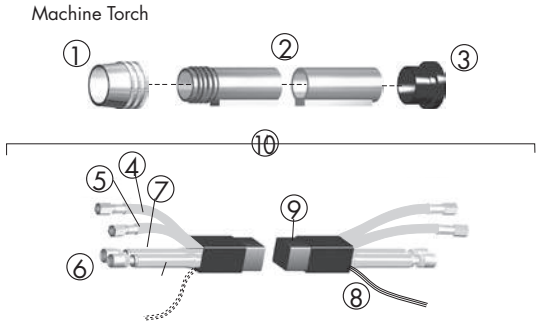

Item	Part No	Ref. No.	Description	Std. Pkg
1.	T-2172	9-5758-5	Plastic Bottom	1
1a.	T-0237	9-5750	Shield Cup	1
	T-1032	9-5750-1	Ceramic Taper Piece	1
1b.	T-0238	9-5758	Shield Cup, Tip Exp.	1
1c.	T-0239	9-5790	Shield Cup, Metal	1
	T-2176	9-5790-1	Metal Front Piece	1
2.	T-0241	9-5746	Tip, .070 Air 150 Amp	5
	T-0242	9-5747	Tip, .055 Air 100 Amp	5
	T-0243	9-5748	Tip, .043 Air 50 Amp	5
	T-0244	9-5751	Tip, .070 Oxy 150 Amp	5
	T-0245	9-5752	Tip, .052 Oxy 100 Amp	5

Item	Part No.	Ref. No	Description	Std. Pkg.
	T-0247	9-5767	Tip, .067 Nit 150 Amp	5
	T-0248	9-5766	Tip, .052 Nit 100 Amp	5
3.	T-0253	9-5749	Electrode, Air	5
	T-0254	9-5754	Electrode, Nit, AR/H	5
	T-0255	9-5760	Electrode, Oxy	5
4.	T-0263	8-0537	O-Ring, Small	10
5.	T-0264	8-0540	O-Ring, Large	10
6.	T-0256	9-5743	TMT-150 Hand Torch, 70°	1
	T-2171	9-5744	TMT-150 Hand Torch, 90°	1
6a.	T-0257	9-5745	TMT-150 Machine Torch	1

ACCESSORIES

Item	Part No.	Ref. No.	Description	Std. Pkg
1.	T-0261	8-2158	Adapter, 1 3/8" Dia	1
2.	T-1077	7-3207	Mounting Tube	1
3.	T-0161	8-4204	Bushing	1
4.	T-0965	8-5565	Plasma Lead, 25'	1
	T-0966	8-5566	Plasma Lead, 50'	1
5.	T-0961	8-5135	Secondary Gas Hose, 25'	1
	T-0962	8-5136	Secondary Gas Hose, 50'	1
6.	T-0969	8-6139	Negative Lead, 25'	1
7.	T-0971	8-6305	Coolant Return Hose, 25'	1
	T-0972	8-6306	Coolant Return Hose, 50'	1
8.	T-0967	8-5567	Control Cable, 25'	1
	T-0968	8-5568	Control Cable, 50'	1
9.	T-0940	8-1000	Leads Sleeving, 25'	1

Item	Part No.	Ref. No.	Description	Std. Pkg.
	T-0960	8-1058	Leads Sleeving, 50'	1
	T-0963	8-5139	Shielded Sleeving, 25'	1
10.	T-0954	4-2863	Hand Leads, 25'	1
	T-0955	4-2864	Hand Leads, 50'	1
	T-0956	4-2865	Machine Leads, 25'	1
	T-0957	4-2866	Machine Leads, 50'	1
NS	T-0950	2-2980	Machine Torch with 25' Leads	1
NS	T-0951	2-2981	Machine Torch with 50' Leads	1
NS	T-0952	2-2982	Hand Torch 70° with 25' Leads	1
NS	T-0958	2-2978	Hand Torch 90° with 25' Leads	1
NS	T-0953	2-2983	Hand Torch 70° with 50' Leads	1
NS	T-0959	2-2979	Hand Torch 90° with 50' Leads	1

Last update of this page: 17/11/2015. See Revision history for details.

THERMACUT®, FHT-EX® AND EX-TRAFIRE® ARE REGISTERED TRADEMARKS OF THERMACUT, K.S. AND MAY BE REGISTERED IN CZECH REPUBLIC AND/OR OTHER COUNTRIES. ALL OTHER TRADEMARKS ARE PROPERTIES OF THEIR RESPECTIVE OWNERS. THERMACUT IS NO WAY AFFILIATED WITH Thermal Dynamics®.
MOST THERMACUT PARTS ARE MADE FOR OR BY AN IBG COMPANY. PARTS INDICATED WITH A OEM ARE ORIGINAL PARTS MANUFACTURED BY THE ABOVE NAMED MANUFACTURER AND ARE BEING RESOLD BY THERMACUT. THERMACUT RESERVES THE RIGHT TO SUBSTITUTE OEM PARTS IN PLACE OF THERMACUT PARTS.
VALID FROM FEBRUARY 2018 • PREVIOUS VERSION IS NO LONGER VALID. • © COPYRIGHT 2018 BY THERMACUT® CZECH REPUBLIC. ALL RIGHTS RESERVED.

REPLACEMENT PARTS SUITABLE FOR
Thermal Dynamics®

MERLIN™ 6000 & 6000GST
MAXIMIZER™ 300

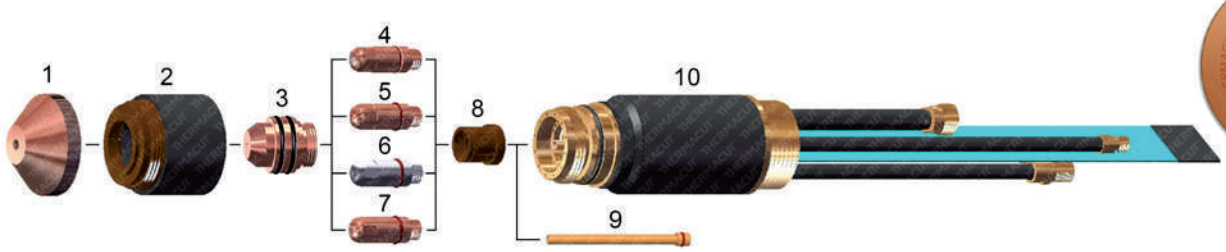

Item	Part No.	Ref. No.	Description	Std. Pkg.	Item	Part No.	Ref. No.	Description	Std. Pkg.
1.	T-2971	20-1003	Shield Cup, 50A	1		T-10264**	20-1018-UR	Electrode, Air 50–225A / O_2 300A	5
	T-2289	20-1004	Shield Cup, 100–225A	1		T-10265**	20-1010-UR	Electrode, Air/O_2,100–225A	5
	T-10708	20-1004 OEM	Shield Cup, 100–225A	1	6.	T-4913	20-1018-AG	Electrode, Air 50–225A/O_2 300A, SilverEX-®	5
	T-2290	20-1005	Shield Cup, 300A	1		T-4914	20-1021-AG	Electrode, Air, 300A, SilverEX-®	5
2.	T-2292	20-1002	Standard Shield Cup Body	1	7.	T-2300	20-1023	Electrode, N_2, 50–300A	5
3.	T-8981	20-1030	Tip, 50A (0.043")	5	8.	T-2301	20-0008	Gas Distributor, 50–225A	2
	T-2303	20-1031	Tip, 100A (0.055")	5		T-2302	20-1009	Gas Distributor, 300A	2
	T-2304	20-1032	Tip, 150A (0.073")	5	9.	T-11846	T-11846	Cooling Tube	1
	T-2305	20-1033	Tip, 225A (0.083")	5	10.	T-1693	9-6410	Torch Body	1
	T-2306	20-1034	Tip, 300A (0.109")	5	NS	T-0261	8-2158	Adaptor	1
4.	T-10702	20-1017	Electrode, O_2, 225A	5	NS	T-1077	7-3207	Mounting Tube	1
5.	T-10441	20-1021-UR	Electrode, Air, 300A	5	NS	T-0160	7-2827 OEM	Pinion Assembly	1
	T-10293**	20-1015-UR	Electrode O_2, 50–100A	5	NS	T-0161	8-4204	Bushing	1
	T-10440**	20-1016-UR	Electrode, O_2, 150A	5					

PCH/M-120

Item	Part No.	Ref. No.	Description	Std. Pkg.	Item	Part No.	Ref. No.	Description	Std. Pkg.
1.	T-0571	20-1225	Short Shield Cup	1	3.	T-0569	20-1215	Gas Distributor	1
2.	T-0577	20-1222	Tip, .063, 120 Amp	5	4.	T-10263	20-1210-UR	Electrode	5
	T-0570	20-1221	Tip, .047, 70 Amp	5	5.	T-11846	T-11846	Cooling Tube	1
	T-0582	20-1220	Tip, .031, 35 Amp	5	6.	T-1693	9-6410	Torch Body	1

** A UNIQUE DESIGN WHICH ENHANCES PERFORMANCE AND DIFFERS FROM OEM DESIGNS

NS NOT SHOWN IN THE PICTURE

SMART SOLUTION – DESIGN IMPROVEMENTS THAT BRINGS ADDED VALUE SUCH AS IMPROVED LIFETIME OF CONSUMABLES, EXCELLENT CUT QUALITY, SPEED OR BETTER COST EFFECTIVENESS OF YOUR SYSTEM

Last update of this page: 24/02/2017. See Revision history for details.

THERMACUT® THE CUTTING COMPANY®

WWW.THERMACUT.CZ
TEL.: +420 556 423 418
SALES@THERMACUT.CZ

WWW.THERMACUT.DE
TEL.: +49 (0) 27 39 40 33 0
INFO@THERMACUT.DE

WWW.THERMACUT.COM
TEL.: 1-603-542-6715
CUSTOMERSERVICE@THERMACUT.COM

THERMACUT®, FHT-EX® AND EX-TRAFIRE® ARE REGISTERED TRADEMARKS OF THERMACUT, K.S. AND MAY BE REGISTERED IN CZECH REPUBLIC AND/OR OTHER COUNTRIES. ALL OTHER TRADEMARKS ARE PROPERTIES OF THEIR RESPECTIVE OWNERS. THERMACUT IS NO WAY AFFILIATED WITH Thermal Dynamics®.
MOST THERMACUT PARTS ARE MADE FOR OR BY AN IBG COMPANY. PARTS INDICATED WITH A OEM ARE ORIGINAL PARTS MANUFACTURED BY THE ABOVE NAMED MANUFACTURER AND ARE BEING RESOLD BY THERMACUT. THERMACUT RESERVES THE RIGHT TO SUBSTITUTE OEM PARTS IN PLACE OF THERMACUT PARTS.
VALID FROM FEBRUARY 2018 • PREVIOUS VERSION IS NO LONGER VALID. • © COPYRIGHT 2018 BY THERMACUT® CZECH REPUBLIC. ALL RIGHTS RESERVED.

PWH/M 2A WELDING TORCH

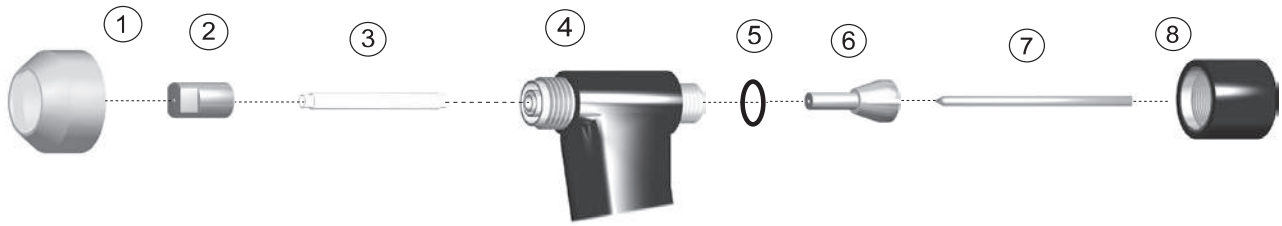

Item	Part No.	Ref. No.	Description	Std. Pkg	Item	Part No.	Ref. No.	Description	Std. Pkg.
1.	T-1482	8-2071	Shield Cup	5		T-1037	8-2028	Torch Head, 90°	1
2.	T-1483	8-2023	Tip, .046, 35A	10		T-1493	8-2097	Torch Head, Machine	1
	T-1485	8-2025	Tip, .081, 75A	10	5.	T-1494	8-2035	O-Ring	5
	T-1486	8-2079	Tip, Long, .031	10	6.	T-1495	8-2039	Collet	1
	T-1487	8-2080	Tip, Long, .046	10		T-0766	8-2041	Collet (.040)	1
	T-1488	8-2082	Tip, Long, .062	10	7.	T-1496	8-2033	Electrode	10
	T-1489	8-2083	Tip, Long, .081	10		T-0768	8-2044	Electrode (.040), Std.	10
3.	T-1490	8-2040	Gas Distributor	1	8.	T-1497	8-2032	Back Cap	1
4.	T-1491	8-2036	Gasket	5		T-0765	8-2030	Back Cap, Extended	1
	T-1492	8-2027	Torch Head, 70°	1					

ACCESSORIES

Machine Torch

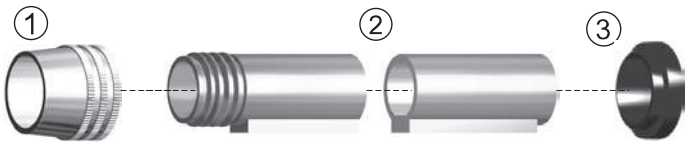

Item	Part No.	Ref. No.	Description	Std. Pkg	Item	Part No.	Ref. No.	Description	Std. Pkg.
1.	T-0157	8-4018	Nut	1	NS	T-0774	2-2840	Machine Torch with 12.5′ Leads without QD	1
2.	T-0159	8-5005	Mounting Tube	1	NS	T-1532	9-2105	Negative Lead, Green, 12-1/2′	1
3.	T-0161	8-4204	Bushing	1	NS	T-1533	8-1494	Negative Lead, Green, 25′	1
NS	T-1526	4-2539	Leads 12-1/2′	1	NS	T-1534	9-2107	Positive Lead, Red 12-1/2′	1
NS	T-1527	4-2585	Leads 25′	1	NS	T-1535	8-1495	Positive Lead, Red 25′	1
NS	T-1528	2-2443	Hand Torch 70° with 12-1/2′ Leads	1	NS	T-1536	8-1074	Plasma Hose 12 1/2′	1
NS	T-4106	2-2100	Hand Torch 70° with 12.5′ Leads & QD	1	NS	T-1537	8-1496	Plasma Hose 25′	1
NS	T-1529	2-2505	Hand Torch 70° with 25′ Leads	1	NS	T-1520	8-1075	Shield Hose 12 1/2′	1
NS	T-0772	2-2444	Hand Torch 90° with Leads 12.5′	1	NS	T-1521	8-1497	Shield Hose 25′	1
NS	T-0775	2-2506	Hand Torch 90° with 25′ Leads	1	NS	T-1446	8-3138	Sleeving 12 1/2′	1
NS	T-1530	2-2480	Machine Torch with 12-1/2′ Leads	1	NS	T-1447	8-3139	Sleeving 25′	1
NS	T-1531	2-2594	Machine Torch with Leads 25′	1					

Last update of this page: 17/11/2015. See Revision history for details.

THERMACUT®, FHT-EX® AND EX-TRAFIRE® ARE REGISTERED TRADEMARKS OF THERMACUT, K.S. AND MAY BE REGISTERED IN CZECH REPUBLIC AND/OR OTHER COUNTRIES. ALL OTHER TRADEMARKS ARE PROPERTIES OF THEIR RESPECTIVE OWNERS. THERMACUT IS NO WAY AFFILIATED WITH Thermal Dynamics®.
MOST THERMACUT PARTS ARE MADE FOR OR BY AN IBG COMPANY. PARTS INDICATED WITH A OEM ARE ORIGINAL PARTS MANUFACTURED BY THE ABOVE NAMED MANUFACTURER AND ARE BEING RESOLD BY THERMACUT. THERMACUT RESERVES THE RIGHT TO SUBSTITUTE OEM PARTS IN PLACE OF THERMACUT PARTS.
VALID FROM FEBRUARY 2018 • PREVIOUS VERSION IS NO LONGER VALID. • © COPYRIGHT 2018 BY THERMACUT® CZECH REPUBLIC. ALL RIGHTS RESERVED.

REPLACEMENT PARTS SUITABLE FOR
Thermal Dynamics®

PWH/M 3A WELDING TORCH

Item	Part No.	Ref. No.	Description	Std. Pkg.	Item	Part No.	Ref. No.	Description	Std. Pkg.
1.	T-1505	8-3040	Shield Cup	1	8.	T-1500	8-3032	Torch Head Assembly (180° offset)	1
	T-1911	8-3038	Shield Cup Standard Weight	1		T-1499	8-3030	Torch Head 70°	1
2.	T-1506	8-3052	Tip, .014, 10A – Std.	10		T-1036	8-3031	Torch Head 90°	1
	T-1508	9-1782	Tip, .031, 30A – Std.	10	9.	T-1027	8-0527	O-Ring Electrode Cap	10
	T-1509	9-1783	Tip, .046, 50A – Std.	10	10.	T-1502	9-1780	Collet	1
	T-1510	9-1784	Tip, .062, 75A – Std.	10	11.	T-1504	9-1779	Electrode Cap – Standard	1
	T-1511	9-1785	Tip, .081, 100A – Std.	10	12.	T-0777	9-1803	Electrode Cap – Extended	1
	T-1512	9-1795	Tip, .093, 150A – Std.	10	NS		9-1757	PWH Handle	1
3.	T-1513	9-1788	Tip Long, .031, 10A – Ext.	10	NS		9-1778 OEM	Sleeve	1
	T-1514	9-1789	Tip Long, .046, 20A – Ext.	10	NS		8-4018	Nut	1
	T-1515	9-1790	Tip Long, .062, 55A – Ext.	10	NS		9-1901	Adaptor	1
	T-1516	9-1791	Tip Long, .081, 75A – Ext.	10	NS		8-5005	Positioning Tube	1
	T-1517	9-1811	Tip Long, .093, 85A – Ext.	10	NS		8-4204	End Cap	1
4.	T-1518	9-2240	Gas Distributor Insulating Sleeve	1	NS		9-1810	Gage/Wrench	1
5.	T-1503	9-1747	Electrode	1	NS	KT-1069	4-2615	PWH/M 3A Cable Leads 3,8m (12,5') Hand/Mach.	1
6.	T-1498	8-3059	Gas Diffuser	1	NS	KT-1474	4-2624	PWH/M 3A Cable Leads 7,6m (25') Hand/Mach.	1
7.	T-1519	8-3057	Gasket – Shield Cup	5	NS	KT-1067	2-2616	PWH 3A Hand Torch 180° 3,8m	1

NS NOT SHOWN IN THE PICTURE

Last update of this page: 02/10/2016. See Revision history for details.

THERMACUT®, FHT-EX® AND EX-TRAFIRE® ARE REGISTERED TRADEMARKS OF THERMACUT, K.S. AND MAY BE REGISTERED IN CZECH REPUBLIC AND/OR OTHER COUNTRIES. ALL OTHER TRADEMARKS ARE PROPERTIES OF THEIR RESPECTIVE OWNERS. THERMACUT IS NO WAY AFFILIATED WITH Thermal Dynamics®.
MOST THERMACUT PARTS ARE MADE FOR OR BY AN IBG COMPANY. PARTS INDICATED WITH A OEM ARE ORIGINAL PARTS MANUFACTURED BY THE ABOVE NAMED MANUFACTURER AND ARE BEING RESOLD BY THERMACUT. THERMACUT RESERVES THE RIGHT TO SUBSTITUTE OEM PARTS IN PLACE OF THERMACUT PARTS.
VALID FROM FEBRUARY 2018 • PREVIOUS VERSION IS NO LONGER VALID. • © COPYRIGHT 2018 BY THERMACUT® CZECH REPUBLIC. ALL RIGHTS RESERVED.

REPLACEMENT PARTS SUITABLE FOR
Thermal Dynamics®

PWH/M 4A WELDING TORCH

Item	Part No.	Ref. No.	Description	Std. Pkg.	Item	Part No.	Ref. No.	Description	Std. Pkg.
1.	T-1448	8-4062	Shield Cup	5	11.	T-1463	9-1876	Collet	1
	T-12352	8-4064 OEM	Shield Cup with Lens	5	12.	T-0191	8-4158	Electrode Cap Standard	1
2.	T-1451	9-1847	Tip, (.062), 100 A - Std.	10		T-2144	9-1877	Electrode Cap Extended	1
	T-1452	9-1848	Tip, (.093), 125 A - Std.	10	NS	T-2146	9-2204	Gas Distributor	1
	T-1453	9-1849	Tip, (.125), 250 A - Std.	10	NS	T-1456	8-0560	O-Ring	1
3.	T-1020	9-1890	Tip, (.062), 100 A - Ext.	10	NS	T-1457	8-0528	O-Ring	1
	T-2145	9-1891	Tip, (.093), 125 A - Ext.	10	NS	T-0157	8-4018	Nut	1
	T-2355	9-1892	Tip, (.125), 250 A - Ext.	5	NS	T-0183	9-1901	Adaptor	1
4.	T-1454	9-1827	Electrode (.187) - Std.	5	NS	T-0159	8-5005	Positioning Tube	1
	T-2134	9-1834	Electrode (.187) - Ext.	5	NS	T-0161	8-4204	End Cap	1
5.	T-2105	8-4011	Liner (without Gas Distributor)	1	NS	KT-1357	2-2125	PWH 4A® 70° Torch with Leads 7,6m (25'), centr.conn.	1
6.	T-1455**	8-4012-UR	Liner (Gas Distributor included)	1	NS	KT-1377	2-2829	PWH 4A® 180° Torch with Leads 7,6m (25'), centr.conn.	1
7.	T-1458	8-4024	Collar	1	NS	KT-1207	9-3088	PWH, M4A® Hose, shield, 4A/6A, 25'	1
8.	T-11543	8-4040 OEM	Shield Gas Diffuser - Threaded	1	NS	KT-1206	8-1505	PWH, M4A® Hose, plas., 25'	1
9.	T-0197	8-4069	Gasket - Shield Cup	5	NS	KT-1186	9-2079	PWH, M4A® Lead, neg. W.C., 12,5' (3,8m)	1
10.	T-1460	8-4014	Torch Head Assembly 70°	1	NS	KT-1200	9-2081	PWH, M4A® Lead, pos. W.C., 12,5' (3,8m)	1
	T-1303	8-4016	Torch Head Assembly 180° offset	1	NS	KT-1201	8-1398	PWH, M4A® Lead, neg. W.C., 25' (7,6m)	1
	T-0075	8-4015	Torch Head Assembly 90°	1	NS	KT-1202	8-1399	PWH, M4A® Lead, pos. W.C., 25' (7,6m)	1
	T-1461	8-4054	Torch Head Assembly 180° inline	1					

** A UNIQUE DESIGN WHICH ENHANCES PERFORMANCE AND DIFFERS FROM OEM DESIGNS

NS NOT SHOWN IN THE PICTURE

Last update of this page: 22/12/2017. See Revision history for details.

THERMACUT®, FHT-EX® AND EX-TRAFIRE® ARE REGISTERED TRADEMARKS OF THERMACUT, K.S. AND MAY BE REGISTERED IN CZECH REPUBLIC AND/OR OTHER COUNTRIES. ALL OTHER TRADEMARKS ARE PROPERTIES OF THEIR RESPECTIVE OWNERS. THERMACUT IS NO WAY AFFILIATED WITH Thermal Dynamics®.
MOST THERMACUT PARTS ARE MADE FOR OR BY AN IBG COMPANY. PARTS INDICATED WITH A OEM ARE ORIGINAL PARTS MANUFACTURED BY THE ABOVE NAMED MANUFACTURER AND ARE BEING RESOLD BY THERMACUT. THERMACUT RESERVES THE RIGHT TO SUBSTITUTE OEM PARTS IN PLACE OF THERMACUT PARTS.
VALID FROM FEBRUARY 2018 • PREVIOUS VERSION IS NO LONGER VALID. • © COPYRIGHT 2018 BY THERMACUT® CZECH REPUBLIC. ALL RIGHTS RESERVED.

REPLACEMENT PARTS SUITABLE FOR
Thermal Dynamics®

PWM 300 WELDING TORCH

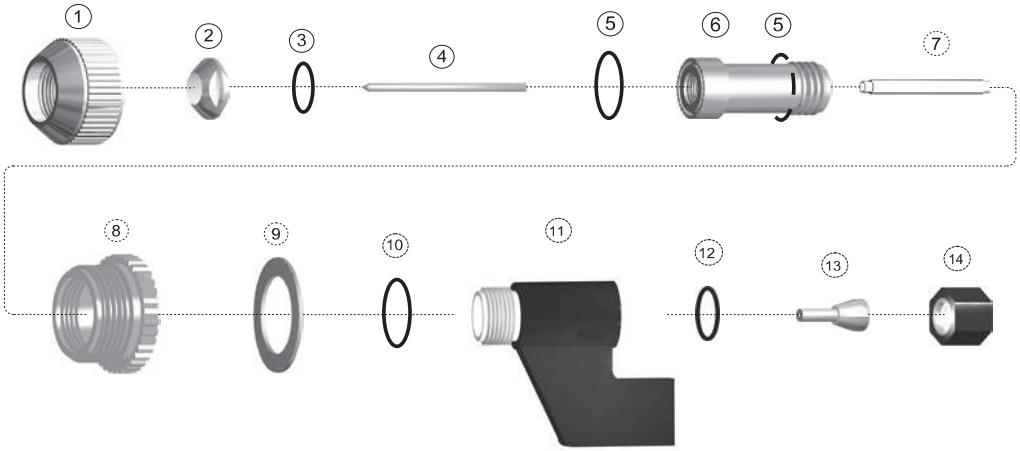

Item	Part No.	Ref. No.	Description	Std. Pkg.	Item	Part No.	Ref. No.	Description	Std. Pkg.
1.	T-2360	8-4373	End Cap	1	7.	T-2365	8-6651	Insulating Sleeve	1
2.	T-2361	8-4370	Tip, .093, 200A	5	8.	T-2366	8-6652	Shield Cup Diffuser	1
	T-2362	8-4371	Tip, .113, 250A	5	9.	T-0230	8-6512	Gasket	5
	T-2363	8-4372	Tip, .125, 300A	5	10.	T-0108	8-0531	O-Ring	10
3.	T-2152	9-2863	O-Ring	10	11.	T-2369	8-6649	Torch Body	1
4.	T-1454	9-1827	Electrode	5	12.	T-2082	8-0534	O-Ring	10
5.	T-1029	9-2956	O-Ring	10	13.	T-2367	8-6650	Collet	1
6.	T-2364	8-6509	Liner (includes 50-720S 2×)	1	14.	T-2368	8-6654	Electrode Cap	1

ACCESSORIES

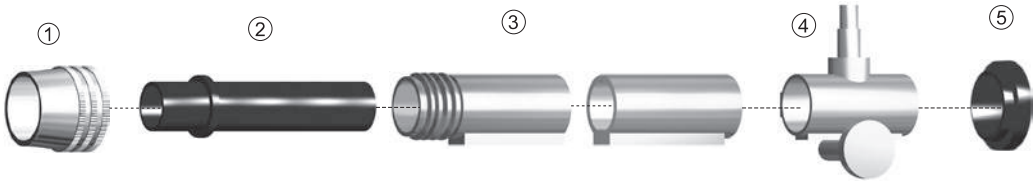

Item	Part No.	Ref. No.	Description	Std. Pkg.	Item	Part No.	Ref. No.	Description	Std. Pkg.
1.	T-0157	8-4018	Nut	1	NS	KT-1055	2-2845	PMW300 with 12.5′ Leads	1
2.	T-0183	9-1901	Adapter	1	NS	KT-1251	2-2846	PMW300 with 25′ Leads	1
3.	T-0159	8-5005	Mounting Tube	1	NS	KT-1207 (T-1445)	9-3088	PWH, M4A® Hose, shield, 4A/6A, 25'	1
4.	T-0160	7-2827 OEM	Pinion Assembly	1	NS	KT-1206 (T-1443)	8-1505	PWH, M4A® Hose, plas., 25'	1
5.	T-0161	8-4204	Bushing	1	NS	KT-1186 (T-1438)	9-2079	PWH, M4A® Lead, neg. W.C., 12,5' (3,8m)	1
NS	KT-1199	4-2525	Torch Leads, 12.5 ft.	1	NS	KT-1200 (T-1440)	9-2081	PWH, M4A® Lead, pos. W.C., 12,5' (3,8m)	1
NS	KT-1204	4-2544	Torch Leads, 25 ft.	1	NS	KT-1201 (T-1439)	8-1398	PWH, M4A® Lead, neg. W.C., 25' (7,6m)	1
NS	T-0236	8-6517 OEM	Wrench	1	NS	KT-1202 (T-1441)	8-1399	PWH, M4A® Lead, pos. W.C., 25' (7,6m)	1

NS NOT SHOWN IN THE PICTURE

Last update of this page: 02/02/2018. See Revision history for details.

THERMACUT®
THE CUTTING COMPANY®

WWW.THERMACUT.CZ
TEL.: +420 556 423 418
SALES@THERMACUT.CZ

WWW.THERMACUT.DE
TEL.: +49 (0) 27 39 40 33 0
INFO@THERMACUT.DE

WWW.THERMACUT.COM
TEL.: 1-603-542-6715
CUSTOMERSERVICE@THERMACUT.COM

THERMACUT®, FHT-EX® AND EX-TRAFIRE® ARE REGISTERED TRADEMARKS OF THERMACUT, K.S. AND MAY BE REGISTERED IN CZECH REPUBLIC AND/OR OTHER COUNTRIES. ALL OTHER TRADEMARKS ARE PROPERTIES OF THEIR RESPECTIVE OWNERS. THERMACUT IS NO WAY AFFILIATED WITH Thermal Dynamics®.
MOST THERMACUT PARTS ARE MADE FOR OR BY AN IBG COMPANY. PARTS INDICATED WITH A OEM ARE ORIGINAL PARTS MANUFACTURED BY THE ABOVE NAMED MANUFACTURER AND ARE BEING RESOLD BY THERMACUT. THERMACUT RESERVES THE RIGHT TO SUBSTITUTE OEM PARTS IN PLACE OF THERMACUT PARTS.
VALID FROM FEBRUARY 2018 • PREVIOUS VERSION IS NO LONGER VALID. • © COPYRIGHT 2018 BY THERMACUT® CZECH REPUBLIC. ALL RIGHTS RESERVED.

REPLACEMENT PARTS SUITABLE FOR
TRAFIMET®

A53™/S54™

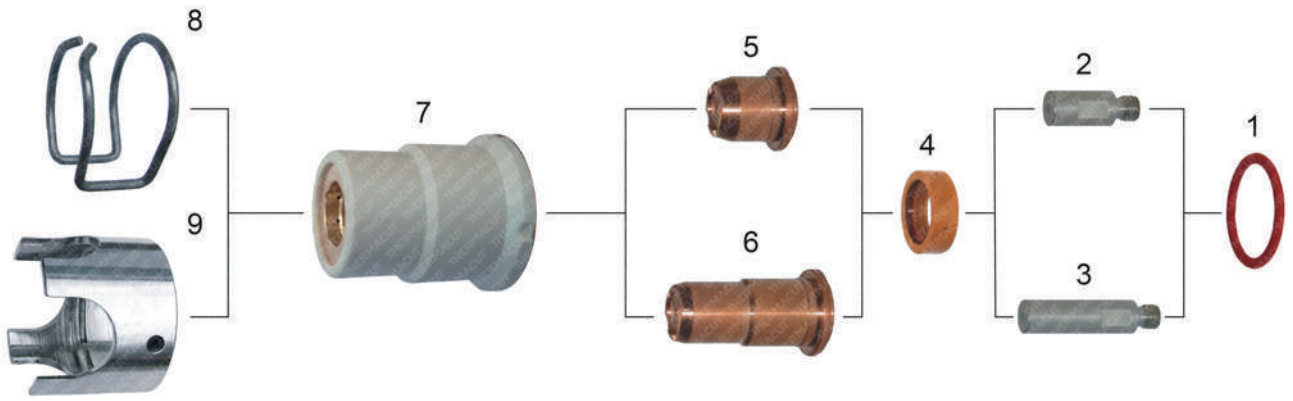

Item	Part No.	Ref. No.	Description	Std. Pkg.	Item	Part No.	Ref. No.	Description	Std. Pkg.
1.	T-5010	EA125	O-Ring	1	6.	T-9524	PD103	Nozzle, Long	10
2.	T-5060	PR105	Electrode	10	7.	T-5016	PC115	Nozzle Retaining Cap (S54™)	6
3.	T-5061	PR106	Electrode, Long	10	8.	T-5005	CV28	Spacer Spring	10
4.	T-5041	PE106	Swirl Ring	10	9.	T-5006	CV33	Crown Spacer	10
5.	T-5019	PD102-10	Nozzle	10					

A60™

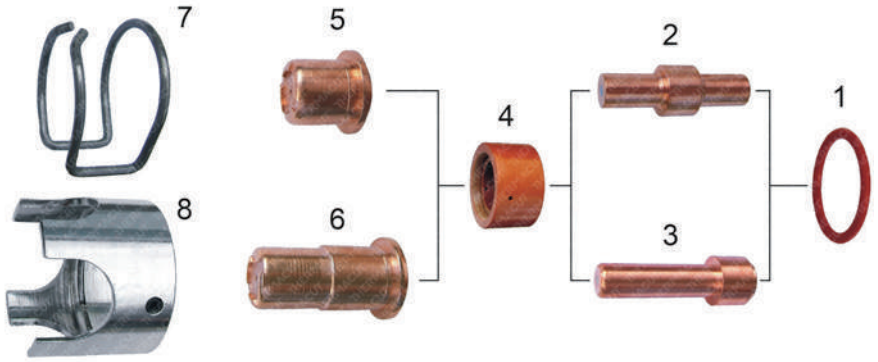

Item	Part No.	Ref. No.	Description	Std. Pkg.	Item	Part No.	Ref. No.	Description	Std. Pkg.
1.	T-5010	EA125	O-Ring	1	6.	T-5024	PD106-10	Nozzle, Long 1.0mm	5
2.	T-5062	PR107	Electrode	5		T-5025	PD106-12	Nozzle, Long 1.2mm	10
3.	T-5063	PR108	Electrode, Long	5	7.	T-5005	CV28	Spacer Spring	10
4.	T-5042	PE107	Swirl Ring	1	8.	T-5006	CV33	Crown Spacer	10
5.	T-5022	PD105-10	Nozzle	5					

Last update of this page: 23/03/2015. See Revision history for details.

THERMACUT®, FHT-EX® AND EX-TRAFIRE® ARE REGISTERED TRADEMARKS OF THERMACUT, K.S. AND MAY BE REGISTERED IN CZECH REPUBLIC AND/OR OTHER COUNTRIES. ALL OTHER TRADEMARKS ARE PROPERTIES OF THEIR RESPECTIVE OWNERS. THERMACUT IS NO WAY AFFILIATED WITH TRAFIMET®.
MOST THERMACUT PARTS ARE MADE FOR OR BY AN IBG COMPANY. PARTS INDICATED WITH A OEM ARE ORIGINAL PARTS MANUFACTURED BY THE ABOVE NAMED MANUFACTURER AND ARE BEING RESOLD BY THERMACUT. THERMACUT RESERVES THE RIGHT TO SUBSTITUTE OEM PARTS IN PLACE OF THERMACUT PARTS.
VALID FROM FEBRUARY 2018 • PREVIOUS VERSION IS NO LONGER VALID. • © COPYRIGHT 2018 BY THERMACUT® CZECH REPUBLIC. ALL RIGHTS RESERVED.

REPLACEMENT PARTS SUITABLE FOR
TRAFIMET®

A80™/P80™

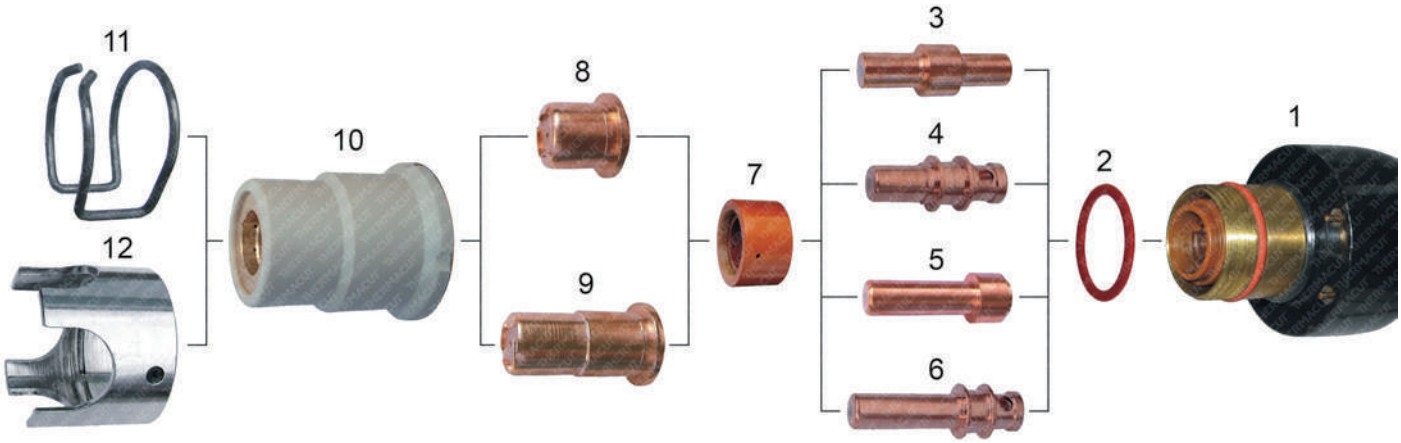

Item	Part No.	Ref. No.	Description	Std. Pkg.	Item	Part No.	Ref. No.	Description	Std. Pkg.
1.	T-5052	PF119	Torch Body - Hand	1	9.	T-5024	PD106-10	Nozzle, Long 1.0mm	5
2.	T-5010	EA125	O-Ring	1	10.	T-5016	PC115	Nozzle Retaining Cap	6
3.	T-5062	PR107	Electrode	5	11.	T-5005	CV28	Spacer Spring	10
4.	T-9216	PR109	Electrode	5	12.	T-5006	CV33	Crown Spacer	10
5.	T-5063	PR108	Electrode, Long	5	NS	T-5442	1356	Handle with Switch	1
6.	T-9804	PR115	Electrode, Long	10	NS	KT-1274	PH130	A80™ Cable Leads 6m, 3/8 fittings	1
7.	T-5042	PE107	Swirl Ring	1	NS	KT-1264	PH132	A80™ Cable Leads 6m, 1/4 fittings	1
8.	T-5022	PD105-10	Nozzle 1.0mm	5	NS	KT-1315	PA171	A80™ Hand Torch with Leads 6m with centr.conn.	1
	T-5023	PD105-12	Nozzle 1.2mm	5					

NS NOT SHOWN IN THE PICTURE

Last update of this page: 27/01/2015. See Revision history for details.

THERMACUT®, FHT-EX® AND EX-TRAFIRE® ARE REGISTERED TRADEMARKS OF THERMACUT, K.S. AND MAY BE REGISTERED IN CZECH REPUBLIC AND/OR OTHER COUNTRIES. ALL OTHER TRADEMARKS ARE PROPERTIES OF THEIR RESPECTIVE OWNERS. THERMACUT IS NO WAY AFFILIATED WITH TRAFIMET®.
MOST THERMACUT PARTS ARE MADE FOR OR BY AN IBG COMPANY. PARTS INDICATED WITH A OEM ARE ORIGINAL PARTS MANUFACTURED BY THE ABOVE NAMED MANUFACTURER AND ARE BEING RESOLD BY THERMACUT. THERMACUT RESERVES THE RIGHT TO SUBSTITUTE OEM PARTS IN PLACE OF THERMACUT PARTS.
VALID FROM FEBRUARY 2018 • PREVIOUS VERSION IS NO LONGER VALID. • © COPYRIGHT 2018 BY THERMACUT® CZECH REPUBLIC. ALL RIGHTS RESERVED.

REPLACEMENT PARTS SUITABLE FOR
TRAFIMET®

A90™/P90™

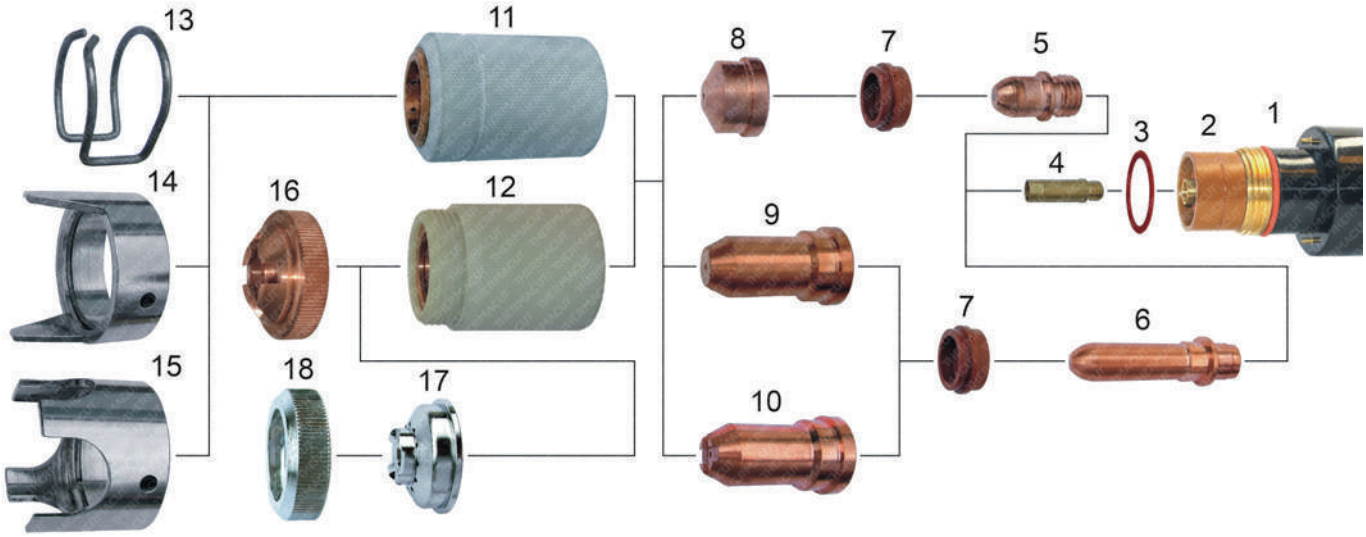

Item	Part No.	Ref. No.	Description	Std. Pkg.	Item	Part No.	Ref. No.	Description	Std. Pkg.
1.	TN-0147	PF109	Torch Body - Hand (part 2, 3 included)	1	10.	T-9527	PD111	Nozzle, Gouging	1
2.	PT-10707	45244-5	Insulator	1	11.	T-3714	PC109	Nozzle Retaining Cap	6
3.	T-3562	EA131	O-Ring	1	12.	T-5015	PC113	Contact Nozzle Ret. Cap	6
4.	PT-10709	45244-7	Diffusor	1	13.	T-3718	CV11	Spacer Spring	5
5.	T-5059	PR101	Electrode	10	14.	T-0643	CV12(1408)	Spacer, Double Pointed	1
6.	T-5065	PR116	Electrode, Long – no thread	5	15.	T-5003	CV14	Crown Spacer	6
7.	T-5072	PE101	Swirl Ring	2	16.	T-5004	CV23	Shield Cup	6
8.	T-2926	PD101-11	Nozzle 1.1mm	5	17.	T-9370		Spacer for Contact Cutting	1
	T-3349	PD101-14	Nozzle 1.4mm	5	18.	T-9375		Locking Nut	1
	T-2955	PD101-17	Nozzle 1.7mm	5	NS	T-5069	TP12	Insulating Sleeve	1
9.	T-5032	PD117-14	Nozzle, Long 1.4mm	10	NS	T-5068	TP10	Handle with Switch	1
	T-5033	PD117-17	Nozzle, Long 1.7mm	10	NS	KT-1182	PA109	A90™ Hand Torch with Leads 6m, fittings	1
	T-5034	PD117-19	Nozzle, Long 1.9mm	10	NS	KT-1375	PA213	A90™ Hand Torch with Leads 6m with centr.conn.	1

NS NOT SHOWN IN THE PICTURE

Last update of this page: 02/01/2017. See Revision history for details.

THERMACUT®, FHT-EX® AND EX-TRAFIRE® ARE REGISTERED TRADEMARKS OF THERMACUT, K.S. AND MAY BE REGISTERED IN CZECH REPUBLIC AND/OR OTHER COUNTRIES. ALL OTHER TRADEMARKS ARE PROPERTIES OF THEIR RESPECTIVE OWNERS. THERMACUT IS NO WAY AFFILIATED WITH TRAFIMET®.
MOST THERMACUT PARTS ARE MADE FOR OR BY AN IBG COMPANY. PARTS INDICATED WITH A OEM ARE ORIGINAL PARTS MANUFACTURED BY THE ABOVE NAMED MANUFACTURER AND ARE BEING RESOLD BY THERMACUT. THERMACUT RESERVES THE RIGHT TO SUBSTITUTE OEM PARTS IN PLACE OF THERMACUT PARTS.
VALID FROM FEBRUARY 2018 • PREVIOUS VERSION IS NO LONGER VALID. • © COPYRIGHT 2018 BY THERMACUT® CZECH REPUBLIC. ALL RIGHTS RESERVED.

REPLACEMENT PARTS SUITABLE FOR
TRAFIMET®

A140™/P140™

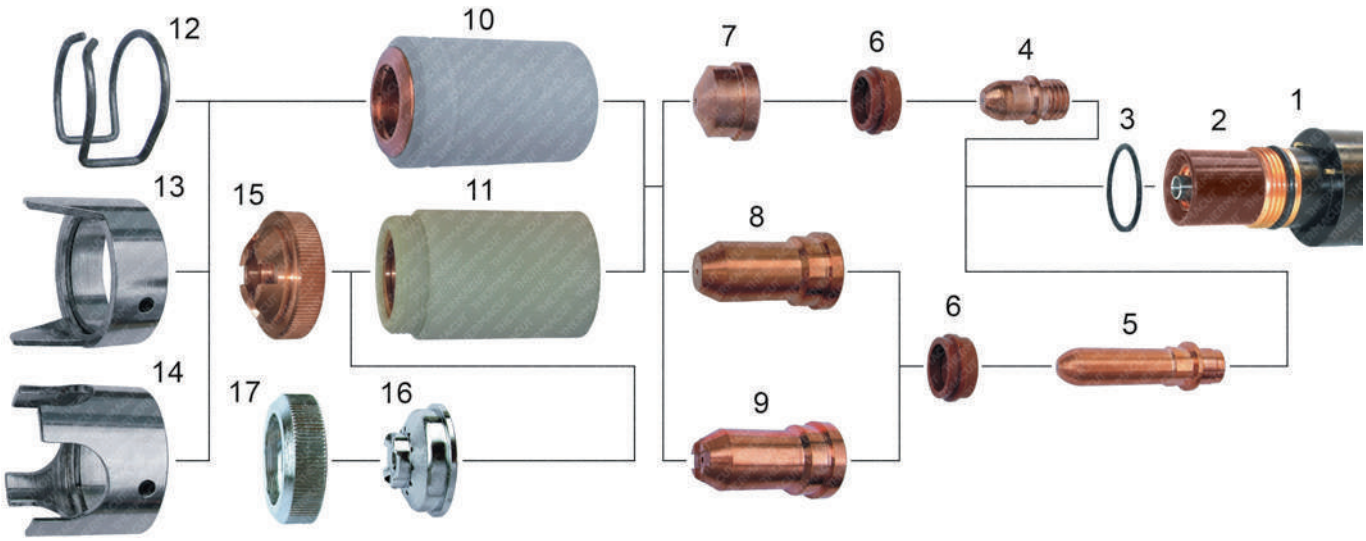

Item	Part No.	Ref. No.	Description	Std. Pkg.	Item	Part No.	Ref. No.	Description	Std. Pkg.
1.	TN-0109	PF101	Torch Body, Hand	1	10.	T-10409	PC101	Nozzle Retaining Cap	1
	TN-0106	PF102	Torch Body, Machine	1	11.	T-5013	PC103	Contact Nozzle Ret. Cap	1
2.	T-11114	60080	Insulator brown (present torch design with brown insulator)	1	12.	T-3718	CV11	Spacer Spring	5
	T-11289	T-11289	Insulator black (old TMT torch design with black insulator)	1	13.	T-0643	CV12(1408)	Double Pointed Spacer	1
3.	T-3562	EA131	O-Ring	1	14.	T-5003	CV14	Crown Spacer	6
4.	T-5059	PR101	Electrode	10	15.	T-5004	CV23	Shield Cup	6
5.	T-5065	PR116	Electrode, Long – no thread	5	16.	T-9370		Spacer for Contact Cutting	1
6.	T-5072	PE101	Swirl Ring	2	17.	T-9375		Locking Nut	1
7.	T-2926	PD101-11	Nozzle 1.1mm	5	NS	T-5069	TP12	Insulating Sleeve	1
	T-3349	PD101-14	Nozzle 1.4mm	5	NS	T-5068	TP10	Handle with Switch	1
	T-2955	PD101-17	Nozzle 1.7mm	5	NS	KT-1100	PH148	A140™ Cable Leads 6m, Hand, fittings	1
	T-2954	PD101-19	Nozzle 1.9mm	5	NS	KT-1219	PA101	A140™ Hand Torch with Leads 6m, fittings	1
8.	T-5032	PD117-14	Nozzle, Long 1.4mm	10	NS	KT-1050	PA214	A140™ Hand Torch with Leads 6m, centr.conn.	1
	T-5033	PD117-17	Nozzle, Long 1.7mm	10	NS	KT-1053	PA219	A140™ Hand Torch with Leads 12m, centr.conn.	1
	T-5034	PD117-19	Nozzle, Long 1,9mm	10	NS	KT-1260	K.P140-M.8,5M.CK.K	P140™ Cable Leads 8,5m, Hand/Mach., fittings	1
9.	T-9527	PD111	Nozzle, Gouging	1	NS	KT-1119	PA146	P140™ Mach. Torch with Leads 12m, centr.conn.	1

NS NOT SHOWN IN THE PICTURE

Last update of this page: 18/11/2016. See Revision history for details.

THERMACUT®, FHT-EX® AND EX-TRAFIRE® ARE REGISTERED TRADEMARKS OF THERMACUT, K.S. AND MAY BE REGISTERED IN CZECH REPUBLIC AND/OR OTHER COUNTRIES. ALL OTHER TRADEMARKS ARE PROPERTIES OF THEIR RESPECTIVE OWNERS. THERMACUT IS NO WAY AFFILIATED WITH TRAFIMET®.
MOST THERMACUT PARTS ARE MADE FOR OR BY AN IBG COMPANY. PARTS INDICATED WITH A OEM ARE ORIGINAL PARTS MANUFACTURED BY THE ABOVE NAMED MANUFACTURER AND ARE BEING RESOLD BY THERMACUT. THERMACUT RESERVES THE RIGHT TO SUBSTITUTE OEM PARTS IN PLACE OF THERMACUT PARTS.
VALID FROM FEBRUARY 2018 • PREVIOUS VERSION IS NO LONGER VALID. • © COPYRIGHT 2018 BY THERMACUT® CZECH REPUBLIC. ALL RIGHTS RESERVED.

REPLACEMENT PARTS SUITABLE FOR
TRAFIMET®

R145™ (Hand) / R145P™ (Machine)

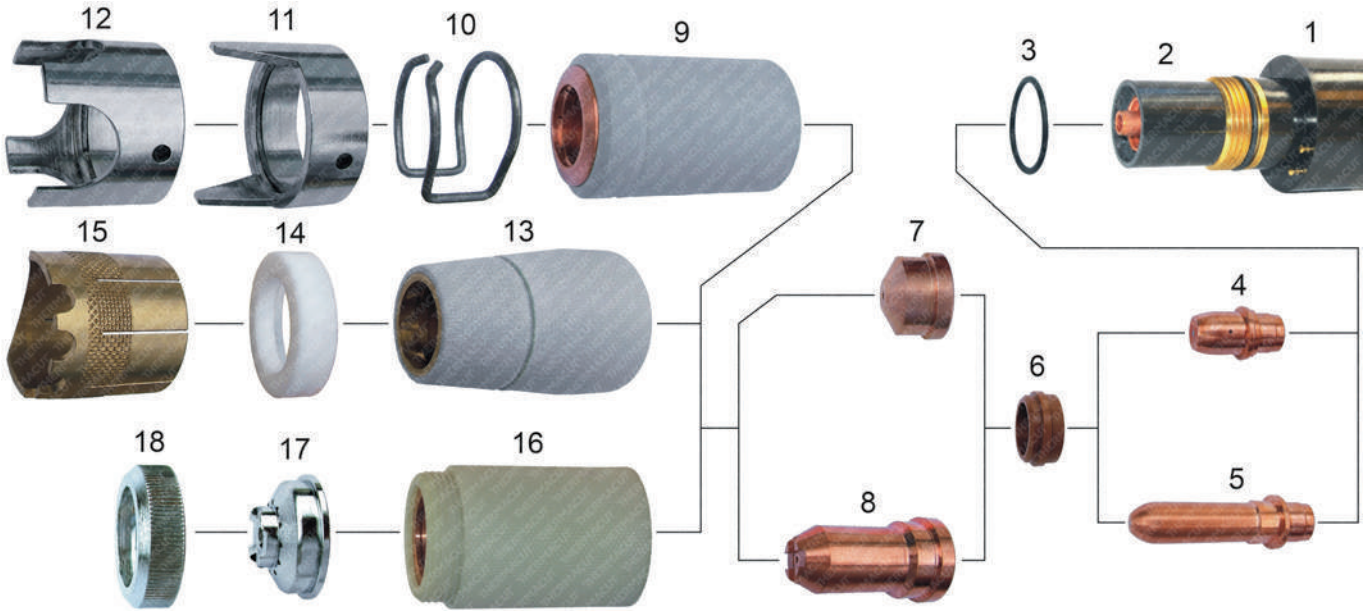

Item	Part No.	Ref. No.	Description	Std. Pkg.	Item	Part No.	Ref. No.	Description	Std. Pkg.
1.	T-5050	PF112	Torch Body, Hand	1	10.	T-3718	CV11	Spacer Spring	5
	T-5049	PF111	Torch Body, Machine	1	11.	T-0643	CV12	Double Pointed Spacer	1
2.	T-11289	T-11289	Insulator (only for TMT torch)	1	12.	T-5003	CV14	Crown Spacer	6
3.	T-3562	EA131	O-Ring	1	13.	T-5017	PC120	Nozzle Retaining Cap	1
4.	T-5064	PR111	Electrode	5	14.	T-5000	BW139	Nozzle Shield	10
5.	T-5065	PR116	Electrode, Long – no thread	5	15.	T-5001	CV1105	Cage Spacer	1
6.	T-5040	PE103	Swirl Ring	2	16.	T-5013	PC103	Contact Nozzle Retaining Cap	1
7.	T-5027	PD109-14	Nozzle 1,4mm	5	17.	T-9371		Spacer for Contact Cutting	1
	T-5028	PD109-16	Nozzle 1,6mm	5	18.	T-9375		Locking Nut	1
	T-5029	PD109-18	Nozzle 1,8mm	5	NS	T-5069	TP12	Insulating Sleeve	1
8.	T-5032	PD117-14	Nozzle, Long 1,4mm	10	NS	T-5068	TP10	Handle with Switch	1
	T-5033	PD117-17	Nozzle, Long 1,7mm	10	NS	KT-1446	PA218	Hand Torch 6m, fittings	1
	T-5034	PD117-19	Nozzle, Long 1,9mm	10	NS	KT-1129	PA250	R145™ Hand Torch 6m, centr.conn.	1
9.	T-10409	PC101	Nozzle Retaining Cap	1	NS	KT-1074	PH151	R145™ Cable Leads 12m, Hand, centr.conn.	1

NS NOT SHOWN IN THE PICTURE

Last update of this page: 18/11/2016. See Revision history for details.

WWW.THERMACUT.CZ
TEL.: +420 556 423 418
SALES@THERMACUT.CZ

WWW.THERMACUT.DE
TEL.: +49 (0) 27 39 40 33 0
INFO@THERMACUT.DE

WWW.THERMACUT.COM
TEL.: 1-603-542-6715
CUSTOMERSERVICE@THERMACUT.COM

THERMACUT®, FHT-EX® AND EX-TRAFIRE® ARE REGISTERED TRADEMARKS OF THERMACUT, K.S. AND MAY BE REGISTERED IN CZECH REPUBLIC AND/OR OTHER COUNTRIES. ALL OTHER TRADEMARKS ARE PROPERTIES OF THEIR RESPECTIVE OWNERS. THERMACUT IS NO WAY AFFILIATED WITH TRAFIMET®.
MOST THERMACUT PARTS ARE MADE FOR OR BY AN IBG COMPANY. PARTS INDICATED WITH A OEM ARE ORIGINAL PARTS MANUFACTURED BY THE ABOVE NAMED MANUFACTURER AND ARE BEING RESOLD BY THERMACUT. THERMACUT RESERVES THE RIGHT TO SUBSTITUTE OEM PARTS IN PLACE OF THERMACUT PARTS.
VALID FROM FEBRUARY 2018 • PREVIOUS VERSION IS NO LONGER VALID. • © COPYRIGHT 2018 BY THERMACUT® CZECH REPUBLIC. ALL RIGHTS RESERVED.

ACCESSORIES

THERMACUT®
THE CUTTING COMPANY®

Coolant Liquid

Thermacut coolants are suitable for plasma cutting and welding, as well as for welding processes MIG, MAG, TIG (WIG) and other industrial applications.
- Specification: max. conductivity 10 µs/cm, ph 6–8, resist freezing to –12 °C (+10 °F).
- Composition: deionized water 70%, propylene glycol 30%.
- Coolant is fully compatible and mixable with original coolants.
- Ecological, fully degradable in the environment.
- Please see product brochure for details.

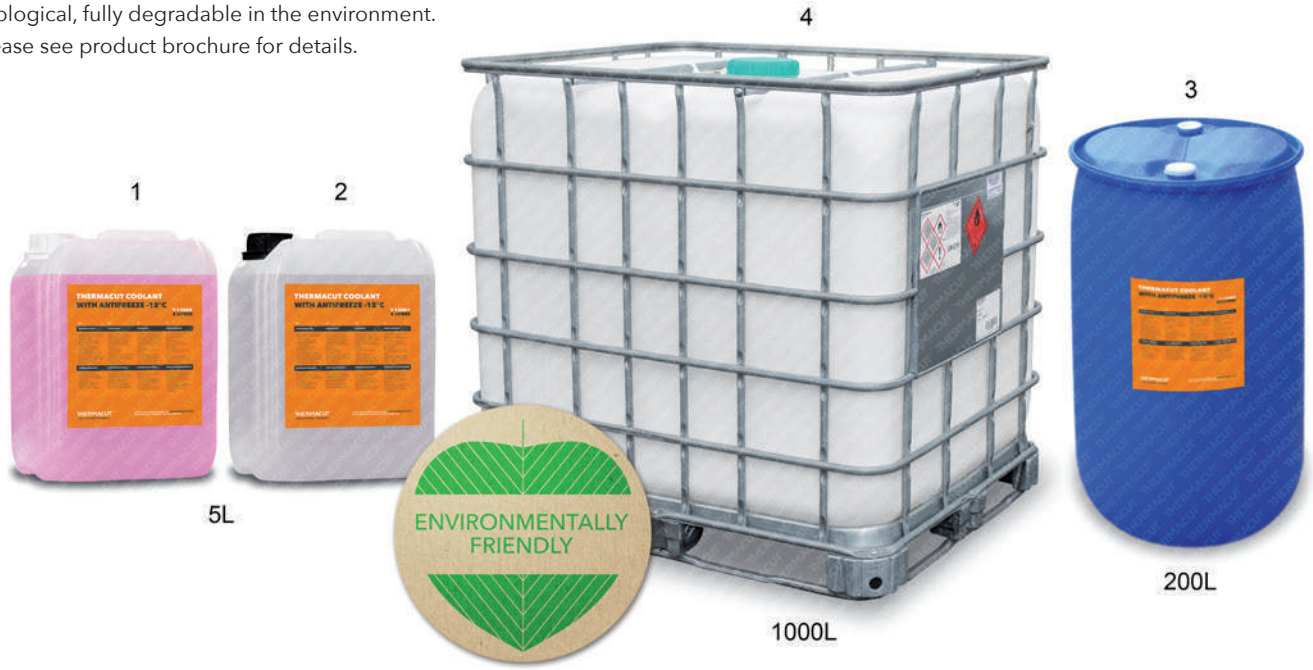

Item	Part No	Ref. No.	Description	Std. Pkg	Weight	Dimensions (cm) L×W×H
1.	T-13000	T-13000	Coolant Liquid, Pink, –12 °C, 5L	1	5,1 kg	19×14×24
			Coolant Liquid, Pink, –12 °C, 5L, 1 PALLET	96	555 kg	120×80×100
2.	T-13001	T-13001	Coolant Liquid, Clear, –12 °C, 5L	1	5,1 kg	19×14×24
			Coolant Liquid, Clear, –12 °C, 5L, 1 PALLET	96	555 kg	120×80×100
3.	T-13004	T-13004	Coolant Liquid, Pink, –12 °C, 200L	1	240 kg	D61-90
			Coolant Liquid, Pink, –12 °C, 200L, 1 PALLET	2	500 kg	120×80×105
	T-13005	T-13005	Coolant Liquid, Clear, –12 °C, 200L	1	240 kg	D61-90
			Coolant Liquid, Clear, –12 °C, 200L, 1 PALLET	2	500 kg	120×80×105
4.	T-13007	T-13007	Coolant Liquid, Pink, –12 °C, 1000L	1	1130 kg	120×100×118
	T-13008	T-13008	Coolant Liquid, Clear, –12 °C, 1000L	1	1130 kg	120×100×118

TARIC CODE: 3402190000

Last update of this page: 22/12/2017. See Revision history for details.

MOST THERMACUT PARTS ARE MADE FOR OR BY AN IBG COMPANY.
VALID FROM FEBRUARY 2018 • PREVIOUS VERSION IS NO LONGER VALID. • © COPYRIGHT 2018 BY THERMACUT® CZECH REPUBLIC. ALL RIGHTS RESERVED.

Electrical Conductivity Meter

VIDEO AVAILABLE AT YOUTUBE CHANEL ▸

Professional tool for checking of coolant condition in safe plastic box. For use in Plasma MIG, TIG (WIG). Coolant conductivity above limit dramatically decrease parts lifetime and increase costs of cutting (welding).

Item	Part No	Ref. No.	Description	Std. Pkg
1.	T-12800	T-12800	Electrical Conductivity Meter	1

PRODUCT BROCHURE WITH DETAILS AT
WWW.THERMACUT.COM
VIDEO AVAILABLE AT YOUTUBE CHANEL ▸

Electrode Pit-Depth Gauge

- Electrode Pit-Depth Gauge allows the operator to actually determine how much electrode life remains.
- Replace the electrode at the same time as the nozzle causes replacing electrodes which still are working properly… and money loose.
- Cost-saving investment.
- Practical safe plastic box included.
- See product brochere for electrode burn limits and product details.

Item	Part No	Ref. No.	Description	Std. Pkg
1.	T-11600	T-11600	Electrode Pt-Depth Gauge	1

Last update of this page: 27/01/2015. See Revision history for details.

MOST THERMACUT PARTS ARE MADE FOR OR BY AN IBG COMPANY.
VALID FROM FEBRUARY 2018 • PREVIOUS VERSION IS NO LONGER VALID. • © COPYRIGHT 2018 BY THERMACUT® CZECH REPUBLIC. ALL RIGHTS RESERVED.

Filter-EX

PRODUCT BROCHURE WITH DETAILS AT
WWW.THERMACUT.COM
VIDEO AVAILABLE AT YOUTUBE CHANEL ▸

Filter for compressed air has been designed to remove moisture, oil aerosols and particulates coming from air compressor. It provides clean, dry and oil-free air, essential for any industrial application.

The filter must be installed as close as possible downstream of the air pressure regulator, in addition to dryers and other filters rather than replacement of the same. The Filter-EX will remove oil aerosols, smokes, moistures and particulates passing through the conventional equipments.

Data Sheet
Filtering Degree: 0.01 µinch – 0.25 µm
Maximum Pressure: 125 PSI – 8.5 bar
Maximum Flow @ 80%: 2700 SCFH – 1250 l/min.
Temperature Range: 15 – 140F / –10 +60 °C
Size Pipe: ¼ NPT
Dimension: Ø 5.2" × 7.9" – Ø 132 × 200 mm

Item	Part No	Ref. No.	Description	Std. Pkg
1.	T-12452	T-12452	Air filter	1
2.	T-12453	T-12453	Cartridge for Air Filter	8

Heat Shield Grease

PRODUCT BROCHURE WITH DETAILS AT
WWW.THERMACUT.COM

Grease will make strong heat shield barrier on the front shield of the torch and cover the parts effectively against melted spatter, which are destroing the parts.
– Highly appreciated for high amperage cutting or aluminum cutting applications.
– Please see product brochure for details.

Item	Part No	Ref. No.	Description	Std. Pkg
1.	T-12777	T-12777	Heat Shield Grease, 500ml	1
	T-11701	T-11701	Heat Shield Grease, 50ml	1

Last update of this page: 02/02/2018. See Revision history for details.

MOST THERMACUT PARTS ARE MADE FOR OR BY AN IBG COMPANY.
VALID FROM FEBRUARY 2018 • PREVIOUS VERSION IS NO LONGER VALID. • © COPYRIGHT 2018 BY THERMACUT® CZECH REPUBLIC. ALL RIGHTS RESERVED.

Silicone Lubricant

1

Silicone lubricant makes consumables change easy and helps avoid gas/coolant leaking. Stable in high temperature and O_2.

Item	Part No	Ref. No.	Description	Std. Pkg
1.	T-0994	T-0994	Silicone Lubricant 25ml	1

Safety Glass Shield

1

Heavy Duty genuine leather casing with standard welding glass 90 × 110 mm DIN12, which can be easily replaced in case of breaking. Make plasma arc visible to reach best cut quality and effectivity.

Item	Part No	Ref. No.	Description	Std. Pkg
1.	T-11768	T-11768	Safety glass shield	1

Last update of this page: 31/01/2017. See Revision history for details.

WWW.THERMACUT.CZ
TEL.: +420 556 423 418
SALES@THERMACUT.CZ
WWW.THERMACUT.DE
TEL.: +49 (0) 27 39 40 33 0
INFO@THERMACUT.DE
WWW.THERMACUT.COM
TEL.: 1-603-542-6715
CUSTOMERSERVICE@THERMACUT.COM

MOST THERMACUT PARTS ARE MADE FOR OR BY AN IBG COMPANY.
VALID FROM FEBRUARY 2018 • PREVIOUS VERSION IS NO LONGER VALID. • © COPYRIGHT 2018 BY THERMACUT® CZECH REPUBLIC. ALL RIGHTS RESERVED.

THERMACUT

Thermacut consumable case suitable for Hypertherm® HPR®130/HPR®260

PRODUCT BROCHURE WITH DETAILS AT
WWW.THERMACUT.COM

PORTABLE AND PRACTICAL CONSUMABLE CASE CONTAINS THE MILD STEEL CUTTING LINE OF 130A AND 260A CONSUMABLES SUITABLE FOR THE HYPERTHERM® HPR®130/HPR®260 PLASMA CUTTING SYSTEM. THE KIT ALSO CONTAINS THE THERMACUT REPLACEMENT TORCH, ADAPTOR AND THE TOOL NECESSARY FOR CONSUMABLE REPLACEMENT.

Item	Part No.	Ref. No.	Description	Std. Pkg.
1.	T-11144	220176	Inner Retaining Cap 80/130A	1
2.	T-11150	220433	Inner Retaining Cap 260A	1
*3.	T-9961*	220173-UR	Shield Cap 30–130A	1
*4.	T-9964*	220398-UR	Shield Cap 200/260A (130/260A, Bevel)	1
5.	T-11138	220163	Receptacle Q. D. Original design	1
6.	T-11137	220162	Torch Q. D. Orig. design (included 2pcs cooling tube 220340-UR)	1
7.	T-9882#	220340-UR	Cooling Tube 30–260A	1
**8.	T-9970**	220440-UR	Shield 260A	4
9.	T-9839	220183	Shield 130A	2
10.	T-10295	220179	Swirl Ring 80/130 (130A Bevel)	1
11.	T-10271	220436	Swirl Ring 260A (260A Bevel)	1
12.	T-10934	220182	Nozzle 130A	5

Item	Part No.	Ref. No.	Description	Std. Pkg.
13.	T-10938	220439	Nozzle 260A	5
#14.	T-9920#	220181-UR	Electrode 130A	3
#15.	T-9974#	220435-UR	Electrode 260A	3
#16.	T-11203#	220181-PRO	Electrode, Silver PRO 130A(=220665-PRO)	1
#17.	T-11197#	220435-PRO	Electrode, Silver PRO 260A(=220668-PRO)	1
#18.	T-4917#	220181-AG	Electrode, SilverEX-® 130A	1
#19.	T-4926#	220435-AG	Electrode, SilverEX-® 260A	1
20.	T-0994	T-0994	Silicone Lubricant 25ml	1
*21.	TN-0069*	104119-UR	Consumables Removal Tool	1
22.	T-12444		Box with parts	1
23.	T-12445		Empty box	1

* FULLY INTERCHANGEABLE WITH ORIGINAL PARTS, BUT DIFFERS FROM ORIGINAL DESIGN

\# THERMACUT ELECTRODES HAS TO BE USED WITH THERMACUT DESIGN COOLING TUBE, OTHERWISE IT DOESN'T FIT TO THE TORCH, THERMACUT COOLING TUBE CAN BE USED FOR THERMACUT DESIGN ELECTRODES AND FOR ORIGINAL DESIGN TOO

** SHIELD OFFERS BETTER LIFETIME BECAUSE OF IMPROVED DESIGN AND IS FULLY INTERCHANGEABLE AND COMPATIBLE WITH ORIGINAL PARTS

-PRO SILVER PRO TECHNOLOGY INCREASES ELECTRODE LIFETIME SIGNIFICANTLY COMPARED TO STANDARD COPPER ELECTRODES

Last update of this page: 18/05/2017. See Revision history for details.

THERMACUT®
THE CUTTING COMPANY®

WWW.THERMACUT.CZ
TEL.: +420 556 423 418
SALES@THERMACUT.CZ

WWW.THERMACUT.DE
TEL.: +49 (0) 27 39 40 33 0
INFO@THERMACUT.DE

WWW.THERMACUT.COM
TEL.: 1-603-542-6715
CUSTOMERSERVICE@THERMACUT.COM

THERMACUT®, FHT-EX® AND EX-TRAFIRE® ARE REGISTERED TRADEMARKS OF THERMACUT, K.S. AND MAY BE REGISTERED IN CZECH REPUBLIC AND/OR OTHER COUNTRIES. ALL OTHER TRADEMARKS ARE PROPERTIES OF THEIR RESPECTIVE OWNERS. THERMACUT IS NO WAY AFFILIATED WITH Hypertherm®.
MOST THERMACUT PARTS ARE MADE FOR OR BY AN IBG COMPANY. PARTS INDICATED WITH A OEM ARE ORIGINAL PARTS MANUFACTURED BY THE ABOVE NAMED MANUFACTURER AND ARE BEING RESOLD BY THERMACUT. THERMACUT RESERVES THE RIGHT TO SUBSTITUTE OEM PARTS IN PLACE OF THERMACUT PARTS.
VALID FROM FEBRUARY 2018 • PREVIOUS VERSION IS NO LONGER VALID. • © COPYRIGHT 2018 BY THERMACUT® CZECH REPUBLIC. ALL RIGHTS RESERVED.

THERMACUT

Thermacut consumable case suitable for Hypertherm® HPR®130XD/HPR®260XD

PORTABLE AND PRACTICAL CONSUMABLE CASE CONTAINS THE MILD STEEL CUTTING LINE OF 130A AND 260A CONSUMABLES SUITABLE FOR THE HYPERTHERM® HPR®130XD/HPR®260XD PLASMA CUTTING SYSTEM. THE KIT ALSO CONTAINS THE THERMACUT REPLACEMENT TORCH, ADAPTOR AND THE TOOL NECESSARY FOR CONSUMABLE REPLACEMENT.

Item	Part No.	Ref. No.	Description	Std. Pkg.
1.	T-11273	220756	Inner Retaining Cap 80/130A	1
⊙ 2.	T-11275 ⊙	220760-UR	Inner Retaining Cap 260A	1
3.	T-11271	220747	Shield Cap 30–130A	1
⊙ 4.	T-11270 ⊙	220637-UR	Shield Cap 200–400A	1
5.	T-11844	220705	Quick - Disconnect Receptacle	1
6.	T-11834	220706	Quick - Disconnect Torch	1
#7.	T-9882#	220340-UR	Cooling Tube 30–260A	1
⊙ 8.	T-11277 ⊙	220764-UR	Shield 260A	4
9.	T-9839	220183	Shield 130A	2
10.	T-10295	220179	Swirl Ring 80/130A (80/130A Bevel)	1
11.	T-10271	220436	Swirl Ring 260A (260A Bevel)	1
12.	T-10934	220182	Nozzle 130A	5

Item	Part No.	Ref. No.	Description	Std. Pkg.
13.	T-10938	220439	Nozzle 260A	5
#14.	T-9920#	220181-UR	Electrode 130A	3
#15.	T-9974#	220435-UR	Electrode 260A	3
#16.	T-11203#	220181-PRO	Electrode, Silver PRO 130A(=220665-PRO)	1
#17.	T-11197#	220435-PRO	Electrode, Silver PRO 260A(=220668-PRO)	1
#18.	T-4917#	220181-AG	Electrode, SilverEX-® 130A	1
#19.	T-4926#	220435-AG	Electrode, SilverEX-® 260A	1
20.	T-0994	T-0994	Silicone Lubricant 25ml	1
*21.	TN-0069*	104119-UR	Consumables Removal Tool	1
22.	T-12446		Box with parts	1
23.	T-12447		Empty box	1

* FULLY INTERCHANGEABLE WITH ORIGINAL PARTS, BUT DIFFERS FROM ORIGINAL DESIGN

\# THERMACUT ELECTRODES HAS TO BE USED WITH THERMACUT DESIGN COOLING TUBE, OTHERWISE IT DOESN'T FIT TO THE TORCH, THERMACUT COOLING TUBE CAN BE USED FOR THERMACUT DESIGN ELECTRODES AND FOR ORIGINAL DESIGN TOO

⊙ MUST BE USED ONLY AS A SET OF SHIELD, SHIELD CAP AND INNER RETAINING CAP, THIS COMPLETE SET IS INTERCHANGEABLE AND COMPATIBLE WITH ORIGINAL PARTS

-PRO SILVER PRO TECHNOLOGY INCREASES ELECTRODE LIFETIME SIGNIFICANTLY COMPARED TO STANDARD COPPER ELECTRODES

Last update of this page: 02/02/2018. See Revision history for details.

THERMACUT®, FHT-EX® AND EX-TRAFIRE® ARE REGISTERED TRADEMARKS OF THERMACUT, K.S. AND MAY BE REGISTERED IN CZECH REPUBLIC AND/OR OTHER COUNTRIES. ALL OTHER TRADEMARKS ARE PROPERTIES OF THEIR RESPECTIVE OWNERS. THERMACUT IS NO WAY AFFILIATED WITH Hypertherm®.
MOST THERMACUT PARTS ARE MADE FOR OR BY AN IBG COMPANY. PARTS INDICATED WITH A OEM ARE ORIGINAL PARTS MANUFACTURED BY THE ABOVE NAMED MANUFACTURER AND ARE BEING RESOLD BY THERMACUT. THERMACUT RESERVES THE RIGHT TO SUBSTITUTE OEM PARTS IN PLACE OF THERMACUT PARTS.
VALID FROM FEBRUARY 2018 • PREVIOUS VERSION IS NO LONGER VALID. • © COPYRIGHT 2018 BY THERMACUT® CZECH REPUBLIC. ALL RIGHTS RESERVED.

THERMACUT

Thermacut consumable case suitable for ESAB® PT-36™

PORTABLE AND PRACTICAL CONSUMABLE CASE CONTAINS THE MILD STEEL CUTTING LINE CONSUMABLES SUITABLE FOR THE ESAB® PT-36™ PLASMA CUTTING SYSTEM. THE KIT ALSO CONTAINS THE THERMACUT REPLACEMENT TORCH AND THE TOOL NECESSARY FOR CONSUMABLE REPLACEMENT.

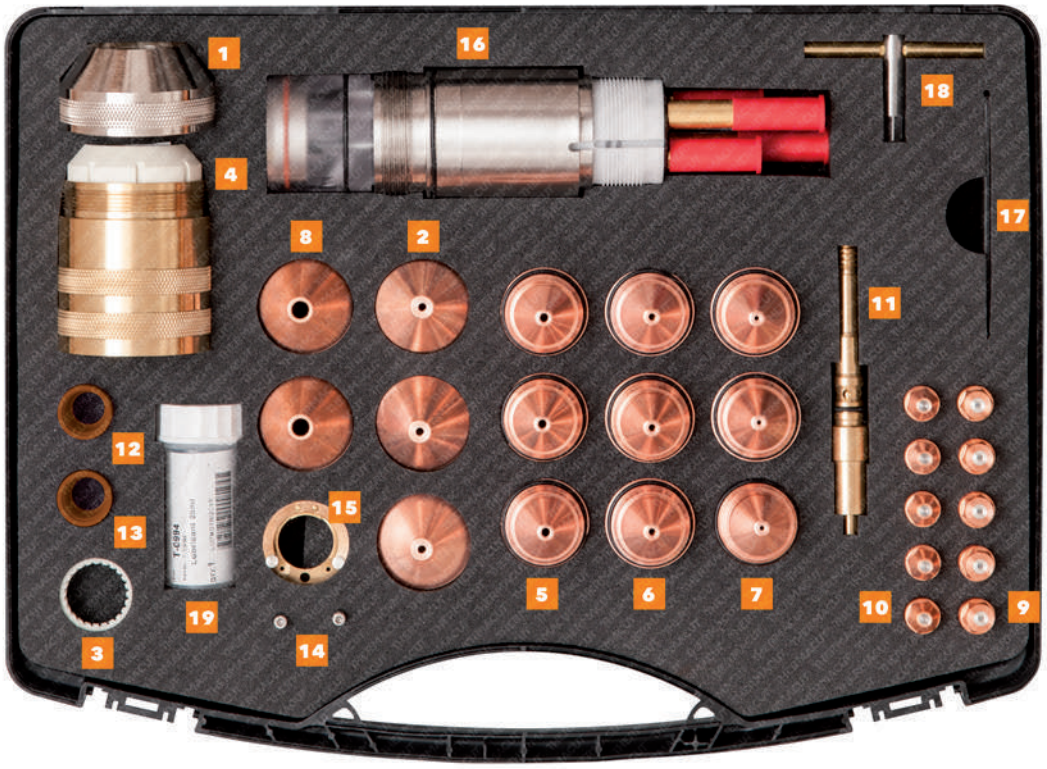

20

21

Item	Part No.	Ref. No.	Description	Std. Pkg.
1.	T-10128	37081	Shield Retainer	1
2.	T-10334	0558006166	Shield Cup 6,6mm 290–450A	3
3.	T-2269	21944	Diffuser 100–600A	1
4.	T-10129	37082	Nozzle Retaining Cap, Standard	1
5.	T-10970	0558006018	Nozzle 1,8mm 100/130A MS, 100A SS/AL	3
6.	T-10338	0558006020	Nozzle 2,0mm 150/200A MS/AL, 130/150A SS	3
7.	T-10443	0558006030	Nozzle 3,0mm 325/360A MS, 360A SS/AL	3
8.	T-10292	0558006041	Nozzle 4,1mm 600A SS/AL	2
⊙ 9.	T-11290 ⊙	0558003914-PRO	Electrode 100–450A, O_2, Silver PRO	5
⊙ 10.	T-11910 ⊙	0558003928-UR	Electrode, N_2/H35	5
⊙ 11.	T-11319 ⊙	0558003924-UR	Electrode Holder	1

Item	Part No.	Ref. No.	Description	Std. Pkg.
12.	T-4606	0558002533	Gas Swirl Baffle, 4 x 0,032, 100–280A	1
13.	T-4636	0558001625	Gas Swirl Baffle, 8 x 0,047, 300–600A	1
14.	T-11942	37073	Screw, contact ring	1
15.	T-11863	0558003858	Contact Ring with screw 37073 (=37071)	1
16.	T-11208	0558003804	Torch Body PT-36™	1
17.	N-20426	93750010	Hex Key Wrench	1
18.	T-11665	0558003918 OEM	Electrode Holder Wrench	1
19.	T-0994	T-0994	Silicone Lubricant 25ml	1
20.	T-12020	T-12020	Box with parts PT-36™	1
21.	T-12027	T-12027	Empty box PT-36™	1

⊙ MUST BE USED AS A SET OF ELECTRODE HOLDER AND ELECTRODE, THIS COMPLETE SET IS INTERCHANGEABLE AND COMPATIBLE WITH ORIGINAL PARTS.

-PRO SILVER PRO TECHNOLOGY INCREASES ELECTRODE LIFETIME SIGNIFICANTLY COMPARED TO STANDARD COPPER ELECTRODES

Last update of this page: 02/02/2018. See Revision history for details.

THERMACUT®
THE CUTTING COMPANY®

WWW.THERMACUT.CZ
TEL.: +420 556 423 418
SALES@THERMACUT.CZ

WWW.THERMACUT.DE
TEL.: +49 (0) 27 39 40 33 0
INFO@THERMACUT.DE

WWW.THERMACUT.COM
TEL.: 1-603-542-6715
CUSTOMERSERVICE@THERMACUT.COM

THERMACUT®, FHT-EX® AND EX-TRAFIRE® ARE REGISTERED TRADEMARKS OF THERMACUT, K.S. AND MAY BE REGISTERED IN CZECH REPUBLIC AND/OR OTHER COUNTRIES. ALL OTHER TRADEMARKS ARE PROPERTIES OF THEIR RESPECTIVE OWNERS. THERMACUT IS NO WAY AFFILIATED WITH ESAB®.
MOST THERMACUT PARTS ARE MADE FOR OR BY AN IBG COMPANY. PARTS INDICATED WITH A OEM ARE ORIGINAL PARTS MANUFACTURED BY THE ABOVE NAMED MANUFACTURER AND ARE BEING RESOLD BY THERMACUT. THERMACUT RESERVES THE RIGHT TO SUBSTITUTE OEM PARTS IN PLACE OF THERMACUT PARTS.
VALID FROM FEBRUARY 2018 • PREVIOUS VERSION IS NO LONGER VALID. • © COPYRIGHT 2018 BY THERMACUT® CZECH REPUBLIC. ALL RIGHTS RESERVED.

DEFINITIONS OF SUFFIXES, SYMBOLS & ABBREVIATIONS

SUFFIXES

OEM – Original Equipment Manufacturer (Original parts) – company which makes a part that is used in another company´s end product.
UR – Unique Replacement – Thermacut company suffix – means product fully interchangeable with original parts (OEM) but differs from original design. Sometimes necessary to use in combination with other – UR parts, sometimes alone, without other conditions.
AG – ARGENTUM – Silver / Heavy duty electrode, made from a silver alloy of high purity, offers better lifetime.
PRO – SILVER PRO technology (Silver insert in the copper electrode) – constructional version between silver and copper electrode, significantly increases electrode lifetime compared to the standard copper electrode. The advantage of a good price / performance ratio.

ABBREVIATIONS

MS – MILD STEEL
SS – STAINLESS STEEL
AL – ALUMINIUM and its alloys
CC – CENTRAL CONNECTOR
Q.D. – QUICK DISCONNECT
W/ – WITH
W/O – WITHOUT
NS – NOT SHOWN IN THE PICTURE
CW/CCW – CLOCK WISE / COUNTER CLOCK WISE gas swirling
!EP – Planned End of Production at shown date – part will not be available after this date.

SYMBOLS

***/**/#/##** – Symbols used in catalogue as the explanatory note.
– This symbols always point to the part/s which Must be used only as a set with another pointed part/s.
(i)/(ii) – Information about limited distributing of marked part on specific market.
! – Ohmic contact wire is not part of the cable leads.
!!! – Demo is inoperative, for exhibition purposes only!

SMART SOLUTION – design improvements that brings added value such as improved lifetime of consumables, excellent cut quality, speed or better cost effectiveness of your system.

WWW.THERMACUT.CZ
TEL.: +420 556 423 418
SALES@THERMACUT.CZ
WWW.THERMACUT.DE
TEL.: +49 (0) 27 39 40 33 0
INFO@THERMACUT.DE
WWW.THERMACUT.COM
TEL.: 1-603-542-6715
CUSTOMERSERVICE@THERMACUT.COM
MOST THERMACUT PARTS ARE MADE FOR OR BY AN IBG COMPANY.
VALID FROM FEBRUARY 2018 • PREVIOUS VERSION IS NO LONGER VALID. • © COPYRIGHT 2018 BY THERMACUT® CZECH REPUBLIC. ALL RIGHTS RESERVED.

REVISION HISTORY

Hypertherm® SECTION – Revision on PAGE 78 – 15/02/2018 – Parts T-0015, T-0086 removed from the picture and from the table.

ESAB®/L-TEC® SECTION – Revision on PAGE 32 – 15/02/2018 – Product line PT-26™ removed from the catalog.

Hypertherm® SECTION – Revision on PAGES 80–81, 88–89 – 15/02/2018 – Description of part T-12064 changed.

KALIBURN® SECTION – Revision on PAGES 100–105 – 15/02/2018 – Part TN-0121 removed from the picture and from the table. Part T-12182 added to the picture and to the table.

Hypertherm® SECTION – Revision on PAGE 45 – 15/02/2018 – Part T-0035 removed from the picture and from the table.

Hypertherm® SECTION – Revision on PAGE 40 – 15/02/2018 – Part T-0092 removed from the table. Part T-0035 removed from the picture and from the table.

CEBORA® SECTION – Revision on PAGE 16 – 15/02/2018 – Ref. No. of part T-11856 changed. Interchangeability note added.

Hypertherm® SECTION – Revision on PAGES 94–95 – 15/02/2018 – Part T-12226 (220788) added to the picture and to the table.

Hypertherm® SECTION – Revision on PAGES 86–87 – 15/02/2018 – Parts T-10200, T-10201, KT-1066, KT-1082, KT-1076, KT-1075, N-10534, T-11207 removed from the picture and from the table.

Hypertherm® SECTION – Revision on PAGE 79 – 15/02/2018 – Parts T-8717, T-8718, T-8720, T-5647, T-8750, T-8705, T-8706, T-8707, T-8708, T-8709, T-8733-4, T-8728, T-8731, T-8730, T-8732, T-5272, T-8045, T-8087, T-8093, T-8049, T-8092, T-8085, T-8089, T-8091, T-8406, T-8059, T-8081, T-8084, T-4918, T-8079, T-8733, T-8734, T-8905, T-10445, T-8733-5, T-8064, T-8052, T-8090 removed from the table. Note (i) removed from the table. Unique design footnote removed.

Thermal Dynamics® SECTION – Revision on PAGE 130 – 02/02/2018 – Parts T-0166, T-0167, T-0168, T-0169, T-0186, T-0188, T-0187, T-0171, T-0173, T-0175, T-1021, T-0177, T-0185, T-0189, T-0163, T-0180, T-0181, T-0182, T-0161, T-0862, T-0863, T-0896, T-0887, T-0892, T-1067, T-0894, T-0865, T-0900, T-0870, T-0871, T-0907, T-0904, T-0876, T-0877, T-0878, T-0879, T-0881, T-1375, T-1376, T-1377, KT-1060 removed from the picture and from the table. Footnote (NS) removed.

Thermal Dynamics® SECTION – Revision on PAGE 130 – 02/02/2018 – Parts T-0143, T-0144, T-0145, T-0146, T-0147, T-0150, T-0122, T-0155, T-0157, T-0872, T-0862, T-0863, T-0866, T-0867, T-0870, T-0871, T-0899, T-0900, T-0856, T-0857, T-0858, T-0859, T-0860, T-0861, T-0848, T-2893, T-0849, T-2894, T-0852, T-0853 removed from the picture and from the table.

Thermal Dynamics® SECTION – Revision on PAGES 10, 129 – 02/02/2018 – Line PCH-62 removed from the catalog.

CATALOGS FOR OXY-FUEL, LASER AND MIG/MAG/TIG CUTTING ARE AVAILABLE ON WWW.THERMACUT.COM

THERMACUT®, FHT-EX® AND EX-TRAFIRE® ARE REGISTERED TRADEMARKS OF THERMACUT, K.S. AND MAY BE REGISTERED IN CZECH REPUBLIC AND/OR OTHER COUNTRIES. ALL OTHER TRADEMARKS ARE PROPERTIES OF THEIR RESPECTIVE OWNERS. THERMACUT IS NO WAY AFFILIATED WITH CEBORA®, ESAB®/L-TEC®, Hypertherm®, KJELLBERG®, LINCOLN ELECTRIC®, Thermal Dynamics®, TRAFIMET®, AJAN®, DAIHEN®/OTC®, KALIBURN®, KOMATSU®, MIGATRONIC®, SAF®.
MOST THERMACUT PARTS ARE MADE FOR OR BY AN IBG COMPANY.
VALID FROM FEBRUARY 2018 • PREVIOUS VERSION IS NO LONGER VALID. • © COPYRIGHT 2018 BY THERMACUT® CZECH REPUBLIC. ALL RIGHTS RESERVED.